Leybold

Oil Sealed Vacuum Pumps

TRIVAC
Rotary Vane Vacuum Pumps

SOGEVAC
Rotary Vane Vacuum Pumps

VACUBE
Screw Vacuum Pumps

210.00.02
Excerpt from the Leybold Vacuum Full Line Catalog (Edition 2021)
Catalog Part Oil Sealed Vacuum Pumps

Contents

Oil Sealed Vacuum Pumps

Rotary Vane Vacuum Pumps **TRIVAC** 6

General

Applications for TRIVAC pumps 6
Accessories for TRIVAC pumps 7
Oil for TRIVAC pumps, for different fields of application 8
Oil for TRIVAC pumps, for different pump types 9

Products

Small Compact Pump S 1,5 10
TRIVAC E, Two-Stage Rotary Vane Vacuum Pump 12
TRIVAC B, Two-Stage Rotary Vane Vacuum Pumps 16
TRIVAC D 4 B and D 8 B 20
TRIVAC D 16 B and D 25 B 24
TRIVAC D 40 B and D 65 B 28
TRIVAC D 16 B-DOT to D 40 B-DOT 32
TRIVAC D 65 B ^{3}He 36
TRIVAC D 16 B-Ex (Explosion Protected and Pressure Burst Resistant) 38
TRIVAC BCS, Two-Stage Rotary Vane Vacuum Pumps 40
TRIVAC D 16 BCS to D 65 BCS 42
TRIVAC D 16 BCS-PFPE to D 65 BCS-PFPE 46
Motor Dependent Data for the TRIVAC B, BCS and BCS-PFPE 50

Accessories for TRIVAC E, B and BCS

Global Versions

Exhaust Filters AF 8 to AF 25-S 58
Condensate Traps AK 8 to AK 25 58
Exhaust Filters AF 4-8 to AF 40-65 60
Exhaust Filters AF 16-25 DOT and AF 40-65 DOT 60
Exhaust Filters with Lubricant Return
ARP 4-8 and AR 4-8 to AR 40-65 62
ARS 16-25 and ARS 40-65 63
Oil Drain Tap 64
Oil Drain Kit 64
Oil Suction Facility AR-V Controlled by Solenoid Valve 65
Manually Operated Oil Suction Facility AR-M 65
Condensate Separators AK 4-8 to AK 40-65 66
Dust Filters FH/DF, DN 16 KF to DN 40 KF 67
Adsorption Traps FH/RF, DN 16 KF to DN 40 KF 68
Cold Trap TK 4-8 69
Dust Separators AS 8-16 and AS 30-60 70
Mechanical Oil Filters OF 4-25 and OF 40-65 72
Chemical Oil Filters CF 4-25 and CF 40-65 72
Chemical Filters with Safety Isolation Valve CFS 16-25 and CFS 40-65 74
Inert Gas System IGS 16-25 and IGS 40-65 75

Limit Switch System LSS 16-25 and LSS 40-65 76
Roots Pump Adaptor 77
Versions for the North and South American Continents
SE Smoke Eliminator 78

General Accessories
Flange Components, Valves 79

Miscellaneous
Services 80
60 Hz Curves 83

Rotary Vane Vacuum Pumps **SOGEVAC NEO D** 86

General
Applications for SOGEVAC NEO D Pumps 86
Oil for SOGEVAC NEO D Pumps, for different fields of application 87
Product Range, Features and Design 88

Products
SOGEVAC NEO D 16 / D 25 / D 40 / D 65 90

Rotary Vane Vacuum Pumps **SOGEVAC** 95

General
Applications for SOGEVAC pumps 95
Oil for SOGEVAC pumps, for different fields of application 95
Oil for SOGEVAC pumps, for different pump types 97
Product Range, Features and Design 98

Products
SOGEVAC .. B
SV 10 B / SV 16 B 100
SV 16 D / SV 16 DI / SV 25 D 102
SV 25 B 106
SV 40 B / SV 65 B 108
SV 100 B 112
SV 120 B 116
SV 200 120
SV 300 B / SV 320 B 124
SV 470 B(F) / SV 570 B(F) 132
SV 630 B / SV 630 BF / SV 750 B(F) 136

SOGEVAC .. BI
SV 28 BI 140
SV 40 BI 144

Pumps Prepared with PFPE for Use with Oxygen 146

SOGEVAC .. ATEX
SV 40 ATEX (Explosion Protected and Pressure Burst Resistant) 148
ATEX Category 2 Pumps 152
ATEX Category 3 Pumps 154

Accessories

Global Versions

Double Inlet Filter and Roots Adapter TwinFilter 500 156
Dust Filters (Suction Side) 160
Dust Filters F (Suction Side)
(Version for the North and South American Continents) 162
SL Liquid Traps 164
Gas Ballast Valve 166
Thermal Switch 166
Mobile Base Frame 168
Noise Enclosure 169
Mounting Accessories 170
Exhaust Filter Gauge 171
Single Phase Power Supply Cables 172
Ball Valves and Valves 174
Bourdon Vacuum Gauges 176
DIAVAC DV 1000 176

Versions for the North and South American Continents

External Carbon Exhaust Filter 177

Global Versions

Connection Fittings
for SOGEVAC SV 10 B, SV 16, SV 16 B, SV 16 D(I), SV 25, SV 25 B, SV 25 D 178
for SOGEVAC SV 40 B, SV 65 B, SV 100 B 180
for SOGEVAC SV 200, SV 300 B, SV 320 B 182
for SOGEVAC SV 470 B(F) / SV 570 B(F) 184
for SOGEVAC SV 630 B(F), SV 750 B(F) 186
60 Hz Curves 188

Special Accessories for Rotary Vane Vacuum Pumps **TRIVAC** and **SOGEVAC**

Versions for the North and South American Continents

Combination Filter, Vacuum Pump Inlet Filter 194

Screw Vacuum Pumps **VACUBE** 196

Products

Oil Sealed Screw Vacuum Pumps 196
VACUBE VQ 400 i to VQ 1650 iCH 196

Applications for TRIVAC pumps

Pumps	S 1,5	TRIVAC D 2,5 E	TRIVAC D 4 B	TRIVAC D 8 B	TRIVAC D 16 B	TRIVAC D 25 B	TRIVAC D 40 B	TRIVAC D 65 B	TRIVAC D 16 B-DOT und D 25 B-DOT	TRIVAC 40 B-DOT	TRIVAC D 65 B ^{3}He	TRIVAC D 16 B-Ex	TRIVAC D 16 BCS und D 25 BCS	TRIVAC D 40 BCS	TRIVAC D 65 BCS	TRIVAC D 16 und D 25 BCS-PFPE	TRIVAC D 40 BCS-PFPE	TRIVAC D 65 BCS-PFPE
Applications																		
Production of semiconductors													■	■	■	■	■	■
Vacuum coating				■	■	■	■						■	■	■	■	■	■
Research and development	■	■	■	■	■	■	■	■			■			■	■	■	■	■
Chemistry/pharmaceuticals		■		■	■	■	■	■					■	■	■	■	■	■
Metallurgy/furnaces							■	■										
Lamps and tubes manufacture		■	■	■	■		■	■										
Automotive industry		■		■	■				■	■								
Laser engineering	■																	
Space simulation							■	■										
Analytical engineering		■	■	■	■	■												
Environment engineering		■	■	■	■	■	■	■										
Cooling and air-conditioning	■		■	■	■	■	■					■						
Electrical engineering	■	■	■	■	■	■	■	■										
Mechanical engineering	■	■	■	■	■	■	■	■										
Medicine technology		■	■	■	■	■												
Vacuum drying cabinets		■	■	■	■	■												
Chemistry and research labs		■	■	■	■	■							■	■	■			
Freeze drying systems		■	■	■	■	■	■	■										
Backing pump for high vacuum pump systems	■	■	■	■	■	■	■	■				■	■	■	■	■	■	■
Leak detectors		■			■	■	■	■										

Accessories for TRIVAC pumps

Pumps	S 1,5	TRIVAC D 2,5 E	TRIVAC D 4 B	TRIVAC D 8 B	TRIVAC D 16 B	TRIVAC D 25 B	TRIVAC D 40 B	TRIVAC D 65 B	TRIVAC D 16 B-DOT + D 25 B-DOT	TRIVAC 40 B-DOT	TRIVAC D 65 B ^{3}He	TRIVAC D 16 B-Ex	TRIVAC D 16 BCS + D 25 BCS	TRIVAC D 40 BCS	TRIVAC D 65 BCS	TRIVAC D 16 + D 25 BCS-PFPE	TRIVAC D 40 BCS-PFPE	TRIVAC D 65 BCS-PFPE
Accessories																		
Exhaust filters AF(-DOT)		■	■	■	■	■	■	■	■	■			■	■	■			
Condensate traps / separators AK	■	■	■	■	■	■	■	■	■				■	■	■	■	■	■
Exhaust filters with lubricant return ARP / AR			■	■	■	■	■	■	■				■	■	■			
Exhaust filters with lubricant return ARS													■	■	■	■	■	■
Exhaust filter drain tap		■																
Oil drain tap	■	■	■	■	■	■	■	■	■	■	■	■	■	■	■	■	■	■
Oil drain kit	■	■	■	■	■	■	■	■	■	■	■	■	■	■	■	■	■	■
Oil suction facility																		
AR-V [1], magnetic		■																
AR-M [1], manual		■																
Dustfilter FH/DF DN 16 to 40 KF	■	■	■	■	■	■	■	■					■	■	■	■	■	■
Adsorption trap FH/RF DN 16 to 40 KF	■	■	■	■	■	■	■	■					■	■	■	■	■	■
Cold trap TK		■	■	■														
Dust separators AS	■	■	■	■	■	■	■	■					■	■	■	■	■	■
Molecular filters MF	■	■	■	■	■	■	■	■					■	■	■	■	■	■
Mechanical oil filters OF			■	■	■	■	■	■										
Chemical oil filters CF			■	■	■	■	■	■					■	■	■	■	■	■
Chemical filters with safety isolation valve CFS		■	■	■	■	■							■	■	■	■	■	■
Inert gas system IGS													■	■	■	■	■	■
Limit switch system LSS													■	■	■	■	■	■
Roots pump adaptor							■	■						■	■		■	■
Flange components, valves	■	■	■	■	■	■	■	■	■	■	■	■	■	■	■	■	■	■

[1] For pumps with gas ballast only

Oil for TRIVAC pumps for different fields of application

Applications	Semiconductor production	Vacuum coating	Research and development	Chemistry/Pharmaceutical	Metallurgy/Furnaces	Lamps and tubes manufactures	Automotive industry	Laser technology	Space simulation	Analytical engineering	Environment technologies	Oxygen applications	Cooling and air-conditioning	Electrical engineering	Machanical engineering	Medicine technology	Vacuum drying cabinets	Chemistry and research labs	Freeze drying	Backing pump for HV pump systems	Food industry
LEYBONOL Oils																					
LVO 100	▲	■	■	■	■	■	■	■	■	■	■		■	■	■	■	■	●	■	■	
LVO 210		■	■	■	■	■	■	■		■	■		■	■	■	■	●	■	●	●	
LVO 240			■	■																	
LVO 300																					■
LVO 310			■		■	■	■						■		■						▲
LVO 400	■	●	■	■								■					▲	●		●	
DOT 4			●				■														

■ = Standard
● = Possible
▲ = Please contact Leybold

The table only lists general applications. Your specific requirements might be subject to deeper analysis. For further questions, please contact our technical Sales support.

For information on oil specifications please refer to Catalog Part "Oils / Greases / Lubricants LEYBONOL®".

Oil for TRIVAC pumps for different pump types

Pumps	S 1.5	TRIVAC D 2.5 E	TRIVAC D 4 B	TRIVAC D 8 B	TRIVAC D 16 B	TRIVAC D 25 B	TRIVAC D 40 B	TRIVAC D 65 B	TRIVAC 40 B-DOT	TRIVAC D 65 B ^{3}He	TRIVAC D 16 B-Ex	TRIVAC D 16 BCS and D 25 BCS	TRIVAC D 40 BCS	TRIVAC D 65 BCS	TRIVAC D 16 and D 25 BCS-PFPE	TRIVAC D 40 BCS-PFPE	TRIVAC D 65 BCS-PFPE
LEYBONOL Oils																	
LVO 100	■	■	■	■	■	■	■	■			■	■	■	■	■			
LVO 210	●	●	●	●	●	●	●	●				●	●	●	●			
LVO 240	●	●	●	●	●	●	●	●				▲			●			
LVO 300			●	●	●	●	●	●										
LVO 310	●	●	●	●	●	▲						▲						
LVO 400		▲	▲													■	■	■
DOT 4									■	■								

■ = Standard
● = Possible
▲ = Please contact Leybold

The table only lists general applications. Your specific requirements might be subject to deeper analysis. For further questions, please contact our technical Sales support..

For information on oil specifications please refer to Catalog Part "Oils / Greases / Lubricants LEYBONOL®".

Small Compact Pump S 1,5

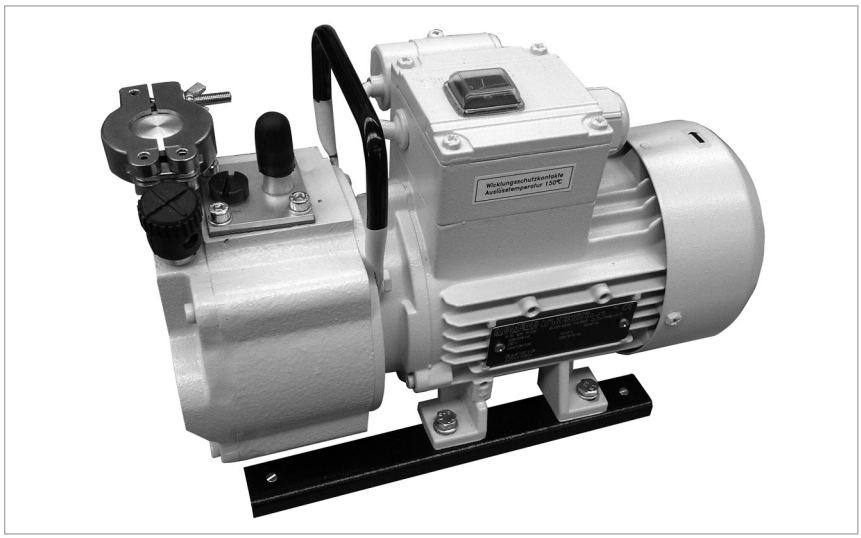

The S 1,5 is a single-stage, oil sealed rotary vane pump with a gas ballast valve. It is driven by a flange mounted AC motor. The shaft of the pump and the shaft of the motor are linked by means of a pinned coupling.

Advantages to the User

- Very small and light-weight
- Low ultimate pressure
- High water vapor tolerance
- Low noise operation
- Simple to connect
- Easy to maintain and use

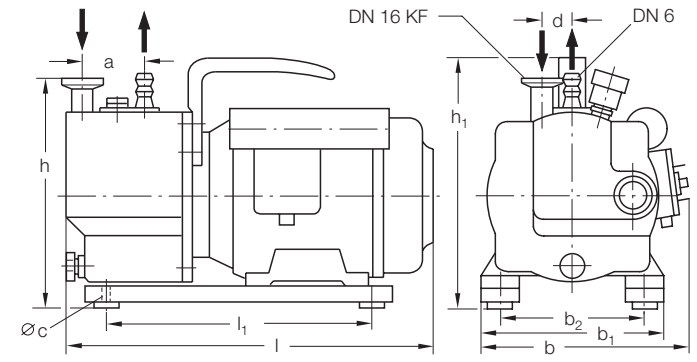

	a	b	b_1	b_2	c	d	h	h_1	l	l_1
mm	45	155	145	100	5	20	160	195	300	191
in.	1.77	6.1	5.71	3.94	0.20	0.79	6.30	7.68	11.81	7.52

Dimensional drawing for the S 1,5

Typical Applications

- In all areas of vacuum engineering where a low intake pressure is required
- Evacuation of refrigerant circuits
- For suction, lifting, emptying, filling and tensioning
- For installation in mobile instruments

Supplied Equipment

- DN 16 small flange connection on the intake side
- Centering ring and clamping ring
- Exhaust port designed as a DN 6 hose nozzle
- Carrying handle
- Built-in ON/OFF switch and overcurrent circuit breaker
- Oil filling

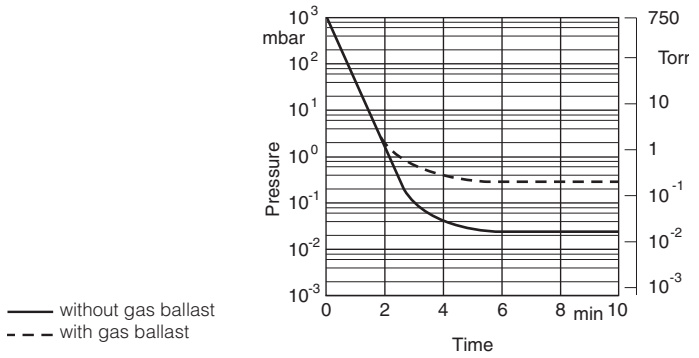

Pump-down characteristics of a 10 l vessel at 50 Hz

Technical Data

		S 1,5	
		50 Hz	60 Hz
Nominal pumping speed [1]	m^3/h (cfm)	1.9 (1.1)	2.3 (1.3)
Pumping speed [1]	m^3/h (cfm)	1.75 (1)	2.1 (1.2)
Ultimate partial pressure without gas ballast [1]	mbar (Torr)	3×10^{-2} (2.3×10^{-2})	3×10^{-2} (2.3×10^{-2})
Ultimate total pressure with gas ballast [1]	mbar (Torr)	5×10^{-1} (3.8×10^{-1})	5×10^{-1} (3.8×10^{-1})
Water vapor tolerance [1]	mbar (Torr)	> 15 (> 11.3)	> 15 (> 11.3)
Water vapor capacity	g/h (lbs/h)	19 (42)	23 (50)
Oil filling, min. / max.	l (qt)	0.11/0.14 (0.12/0.15)	0.11/0.14 (0.12/0.15)
Noise level to DIN 45 635	dB(A)	50	50
Admissible ambient temperature	°C (°F)	12 – 40 (53.6 –104)	12-40 (53.6 –104)
Max. permanent inlet pressure	mbar (Torr)	30 (22.5)	30 (22.5)
Motor rating	W (hp)	250 (0.34)	250 (0.34)
Nominal speed	rpm	1500	1800
Weight	kg (lbs)	8.8 (19.4)	8.8 (19.4)
Connections			
Intake	DN	16 KF	16 KF
Exhaust		6 mm hose nipple	6 mm hose nipple

Ordering Information

S 1,5

	Part No.
S 1,5 with AC motor, 230 V (208 – 252 V ± 5%), 50/60 Hz, with 2 m long mains cord and EURO plug	**101 01**
Transition connector (250 V AC, 10 A, L+N+PE) only necessary in Switzerland for 1~ pumps	**800 001 274**
AK 8 condensate trap	**190 60**
Connection components	
Elbow (1x) DN 16 KF	**184 36**
Centering ring with O-ring (2x) DN 16 KF	**183 26**
Clamping ring (2x) DN 16 KF	**183 41**

[1] To DIN 28 400 and following numbers

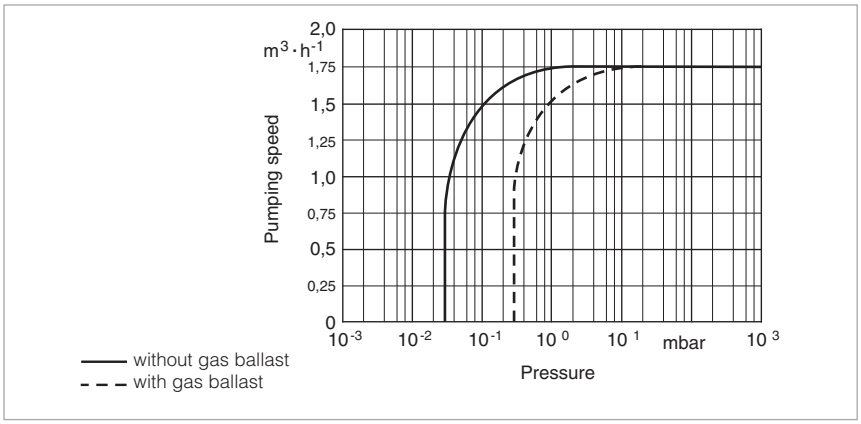

Pumping speed characteristics at 50 Hz

TRIVAC E, Two-Stage, Oil Sealed Rotary Vane Vacuum Pump

TRIVAC D 2,5 E

The TRIVAC E pump is an oil sealed vacuum pump operating according to the rotary vane principle. Oil which is injected into the pump chamber is used for sealing, lubrication and cooling purposes.

The result is the TRIVAC E rotary vane vacuum pump.

Beyond the usual quality and reliability of the B series pumps, the TRIVAC E pump offers improvements in the area of quieter operation, smaller size and improved service-friendliness.

The intake and exhaust ports are equipped with small flanges. Besides standard voltages and frequencies, Leybold offers world motors, which are specially required by OEMs.

Advantages to the User

- Highly reliable
- Small and compact
- Quiet operation
- Environmentally compatible (low oil consumption, EMI compatible, IP 54 protection)
- Process quality (low backstreaming of oil)
- Motor for all standard supply voltages and frequencies
- Safe and intelligent vacuum protection (hermetically sealed)
- Free of yellow metals
- Compliance with international standards (CE)
- Suitable for continuous operation at 1000 mbar (750 Torr)
- Low power consumption
- Better individual performance given by 3 stage gas ballast device
- High water vapor tolerance
- Simplified customizing ability

Typical Applications

- Mass and X-ray spectrometers
- Electron beam microscopes
- Leak detectors
- Sterilizers
- Freeze-drying systems
- Chemical and research labs
- General vacuum engineering
- Backing pump for high vacuum pump systems

Supplied Equipment

- Dirt trap
- Oil filling included separately (standard LVO 100)
- Gas ballast device
- Mains cord with the specific plug for EURO, US and Japan motors
- Optional: Mains cord with country specific plug for the world motor
- With handle

All pumps are 100% subjected to a vacuum test before delivery!

TRIVAC D 2,5 E

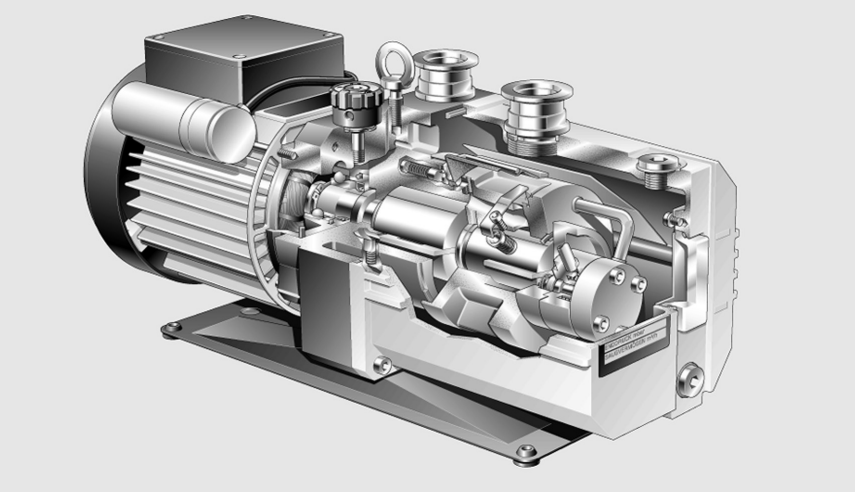

TRIVAC E

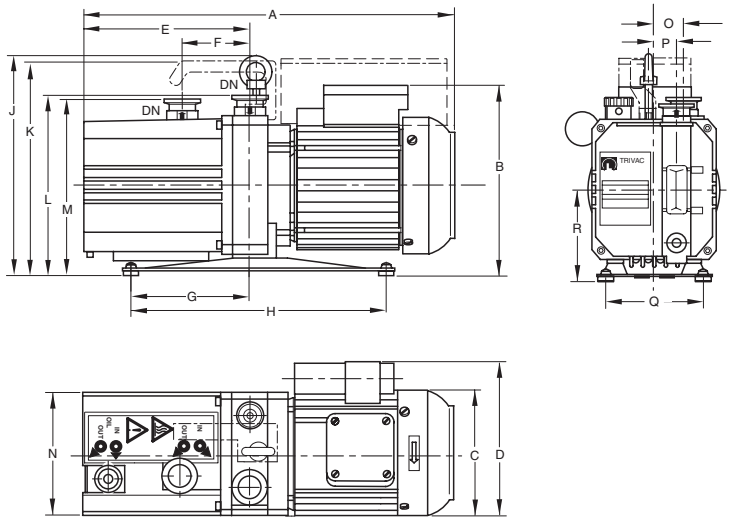

	A	B	
	EURO, World	EURO, Jap, US	World 1 ~
mm	392	210	227
in.	15.4	8.27	8.94

	C			
	EURO, Jap, US	World 1 ~	EURO	World 1 ~
mm	127	127	148.5	127 [1]
in.	5	5	5.85	5 [1]

	E	F	G	H	J	K
mm	162.5	75.5	119.5	225	231.5	225
in.	6.4	2.97	4.7	8.86	9.90	8.86

	L	M	N	O	P	Q	R	DN
mm	182	177	113	27	15	83	84.5	16 KF
in.	7.16	6.97	4.45	1.06	0.59	3.27	3.33	16 KF

[1] Capacitors in the connection box

Dimensional drawing for the TRIVAC D 2,5 E

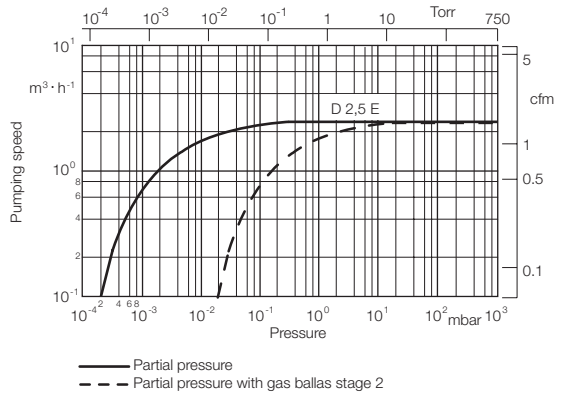

Pumping speed of the TRIVAC D 2,5 E at 50 Hz (60 Hz curves at the end of the chapter)

Technical Data

		TRIVAC D 2,5 E	
		50 Hz	60 Hz
Nominal pumping speed [1]	m^3/h (cfm)	3.2 (1.9)	3.6 (2.1)
Pumping speed [1]	m^3/h (cfm)	2.7 (1.6)	3.3 (1.9)
Ultimate partial pressure without gas ballast [1]	mbar (Torr	$\leq 5 \times 10^{-4}$ ($\leq 3.8 \times 10^{-4}$)	$\leq 5 \times 10^{-4}$ ($\leq 3.8 \times 10^{-4}$)
Ultimate total pressure without gas ballast [2]	mbar (Torr)	$\leq 2 \times 10^{-3}$ ($\leq 1.5 \times 10^{-3}$)	$\leq 2 \times 10^{-3}$ ($\leq 1.5 \times 10^{-3}$)
Ultimate total pressure with gas ballast Stage 2 [2]	mbar (Torr)	$\leq 3 \times 10^{-2}$ ($\leq 2.3 \times 10^{-2}$)	$\leq 3 \times 10^{-2}$ ($\leq 2.3 \times 10^{-2}$)
Water vapor tolerance			
Stage 1	mbar (Torr)	10 (7.5)	10 (7.5)
Stage 2	mbar (Torr)	20 (15)	20 (15)
Stage 3	mbar (Torr)	30 (22.5)	30 (22.5)
Water vapor capacity			
Stage 1	g/h (lbs/h)	20 (0.044)	25 (0.055)
Stage 2	g/h (lbs/h)	40 (0.088)	50 (0.110)
Stage 3	g/h (lbs/h)	60 (0.132)	75 (0.165)
Oil filling, min. / max.	l (qt)	0.4 / 0.7 (0.42 / 0.74)	0.4 / 0.7 (0.42 / 0.74)
Noise level	dB(A)	≤ 47	≤ 49
Admissible ambient temperature	°C (°F)	+10 to +40 (+50 to +104)	+10 to +40 (+50 to +104)
Motor rating	W (HP)	280 (0.38)	300 (0.41)
Nominal speed	rpm	1400	1600
Type of protection	IP	54	54
Weight (with oil filling)	kg (lbs)	16.1 (35.4)	16.1 (35.4)
Connections (Intake and Exhaust)	DN	16 KF	16 KF

[1] To DIN 28 426 T1

[2] To DIN 28 400 and following numbers

Motor Dependent Data

Motors for D 2,5 E	Voltage (V)	Frequency (Hz)	Voltage tolerance	Power consumption (W (HP))	Nominal current (A)	Protection	Nominal speed (rpm)
EURO 1 ~	220–240/230	50/60	± 5%	280/300 (0.38/0.41)	1.8/1.4	IP 54	1400/1600
World 1 ~	100–120 200–240	50/60	± 5%	290/310 (0.39/0.42)	4.4/3.0 2.2/1.5	IP 54	1400/1600

Ordering Information

TRIVAC D 2,5 E

	Part No.
TRIVAC E with 1.8 m (6 ft.) long mains cord EURO version, 1-ph., 220 – 240 V, 50 Hz; 230 V, 60 Hz Schuko plug	**140 000**
CH plug	**140 005**
Single phase world motor, 100 – 120 V, 200 – 240 V 50/60 Hz (without mains cord)	**140 001**
Further variants upon request	
Accessories	
Connection cable for single phase world motor 230 V Schuko plug	**E20081091**
230 V UK plug	**E20081097**
230 V CH plug	**E20081099**
230 V NEMA plug (200 – 240 V)	**E20081141**
115 V NEMA plug (100 – 120 V)	**E20081090**
Exhaust filter AF 8	**190 50**
Replacement filter elements FE 8 for AF 8 (pack of 5)	**ES19080**
Manual oil return AR-M via gas ballast inlet (kit for AF 8-16)	**190 93**
Oil suction AR-V controlled by a solenoid valve via the gas ballast inlet (kit for AF 8-16)	**190 92**
Condensate trap AK 8	**190 60**
Oil drain tap (M 16 x 1.5)	**190 90**
Oil drain kit (M 16 x 1.5)	**190 94**
Connection components Elbow (1x) DN 16 KF Centering ring with O-ring (2x) DN 16 KF Clamping ring (2x) DN 16 KF	 **184 36** **183 26** **183 41**
Spare Parts	
Maintenance kit 1 (oil demister, oil box seal)	**200 40 022**
Repair kit 1 (motor side sealing, shaft sealing ring, coupling sleeves, compression spring)	**E 100 000 351**
Repair kit 2 (valves, oil demister, oil box seal)	**200 40 024**
Repair kit 3 (oil demister, sealing, wearing parts)	**E 100 000 347**

For further accessories see Chapter “Accessories for TRIVAC E, B and BCS”

TRIVAC B, Two-Stage Rotary Vane Vacuum Pumps TRIVAC D 4 B to D 65 B

The TRIVAC B is part of the well-proven TRIVAC concept.
The TRIVAC B pumps with their comprehensive range of accessories have proven themselves time and again as rugged pumps in many and varied applications.

The inner body is assembled from individual parts without sealing components. The parts are pinned in order to ensure easy disassembly and reassembly of the parts.

All pumps from the D 4 B to the D 25 B model are equipped either with single-phase or three-phase motors. D 40 - 65 B models are equipped with three-phase motors. In the TRIVAC B, the pump unit and the motor are linked by an elastic coupling.

The TRIVAC B range is a modular system which divides into three groups:

TRIVAC 4/8 Series
TRIVAC 16/25 Series
TRIVAC 40/65 Series

Advantages to the User

- All basic models (single-phase and three-phase motor) are certified in accordance with 2014/34/EU (ATEX) (Category 3 inside)
- High water vapor tolerance
- Continuous operation even at 1000 mbar
- Built-in oil pump; pressure-lubricated sliding bearings
- All controls as well as the oil sight glass are located on the front face
- Either vertical or horizontal intake and exhaust ports
- Exchangeable inner body
- Anti-suckback valve controlled via the oil pressure
- Free of yellow metals
- Service-friendly
- Ideal as backing pump for medium and high vacuum applications, because of low oil backstreaming
- Highly leaktight (^{4}He-capable)

Typical Applications

See chapter “General, Applications and Accessories”.

Supplied Equipment

Small flanges, centering and clamping rings. The intake flange contains a dirt trap.

A carrying handle is standard for all pumps up to the D 25 B. TRIVAC B pumps with single-phase motors are delivered with ON/OFF switch, mains cord and main plug, ready for immediate operation.

Standard TRIVAC B pumps come with a filling of oil LEYBONOL LVO 100, others with special oil fillings can be specified.

All pumps are 100% subjected to a vacuum test before delivery!

Custom Models

- ATEX (Category 3 inside and 3 outside)
- Brake fluid
- Oils for refrigerating machines, e.g. ester oils for refrigerant circuits with R 134 a
- Pressure burst resistant (for the new refrigerants propane and isobutane)
- ^{3}He-tight (for cryostats)
- Special motors

TRIVAC D 16 B-DOT to D 40 B-DOT

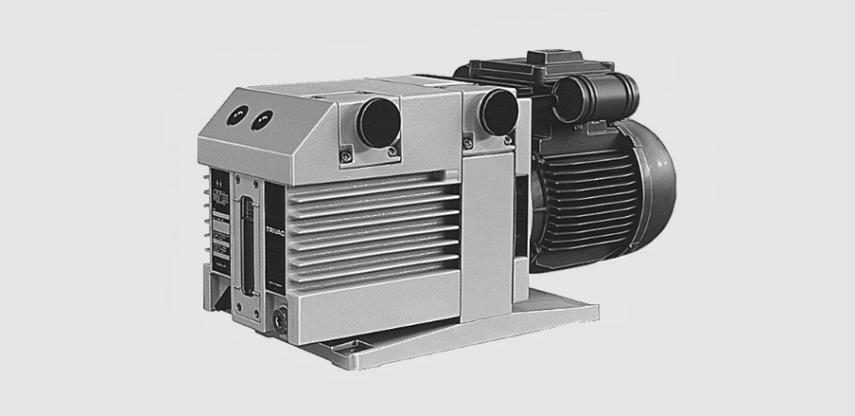

The TRIVAC B-DOT pumps operate with brake fluid (DOT 4) as the sealing and lubricating agent. Therefore these pumps are equipped with EPDM seals. EPDM is highly compatible with brake fluid.

Advantages to the User

- Matching exhaust filters with EPDM gaskets (AF-DOT)
- Except for the seals and the fluid the TRIVAC B-DOT pumps are identical to the oil sealed TRIVAC B pumps

Typical Applications

- For filling of brake fluid circuits in the automotive industry

Supplied Equipment

- The brake fluid is inside the pump when shipped

TRIVAC D 65 B ^{3}He

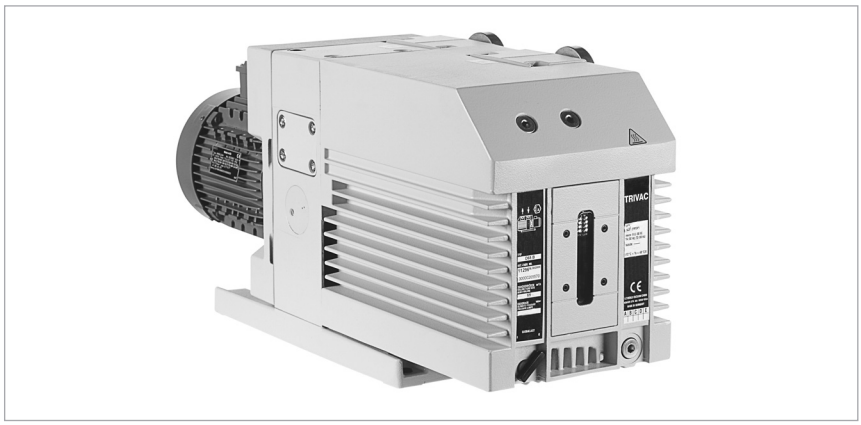

Advantages to the User

- Leak rates below 1×10^{-7} mbar x l/s, also while the pump is running
- Low pressures of 100 mbar in the oil box are permitted during operation
- No gas ballast facility
- Pump is FPM (FKM)-sealed

Typical Applications

- Pumping of continuously or discontinuously ^{3}He operated cryostats, also on ^{3}He and ^{4}He mixed cryostats
  - In these cryostats the very expensive helium isotope ^{3}He, respectively mixtures consisting of ^{3}He and ^{4}He are pumped and this is generally done continuously in cycles running over weeks. The gas must neither be lost nor contaminated. For this reason exhaust lines are frequently operated at low pressures of 100 mbar (absolute)

TRIVAC D 16 B-Ex, Explosion Protected and Pressure Burst Resistant

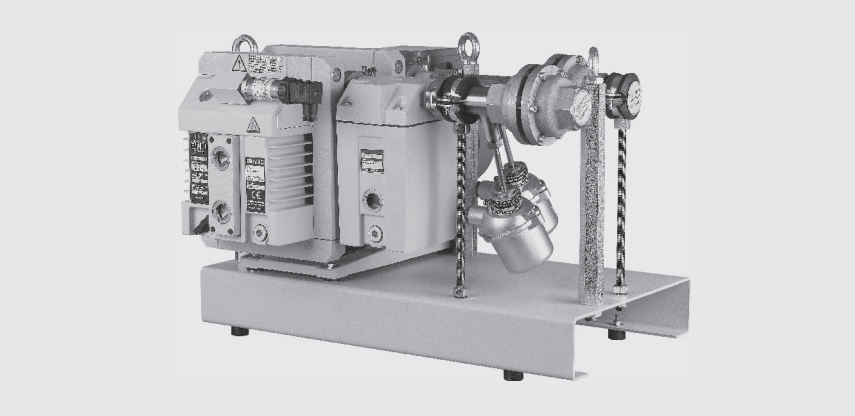

ATEX

Category 1 inside and 2 outside

Typical Applications

- Pumping of gases belonging to Group IIB3 and IIC [1] from Zone 0

Vacuum pumps TRIVAC D 16 B-Ex meet the requirements of the European Directive 2014/34/EU (ATEX Directive). TRIVAC D 16 B-Ex pumps are classified inside as Category 1, outside as Category 2. Thus these pumps are suited for pumping explosive gases from Zone 0, the pump itself may be located in Zone 1.

The vacuum pumps TRIVAC D 16 B-Ex are qualified for gases of Explosion Groups IIC [1] and IIB3. The temperature class is T4. TRIVAC D 16 B-Ex pumps are explosion resistant and correspond to the state-of-the-art. They are equipped as standard with one each temperature sensor on the intake and delivery side.

Moreover, the pressure inside the pump is monitored. Flame arresters on the intake and delivery side protect the upstream and downstream system sections. Also provided as standard is an exhaust filter for every pump.

[1] With the exception of acetylene and carbon bisulphide

TRIVAC D 4 B and D 8 B

TRIVAC D 4 B (left) and TRIVAC D 8 B (right)

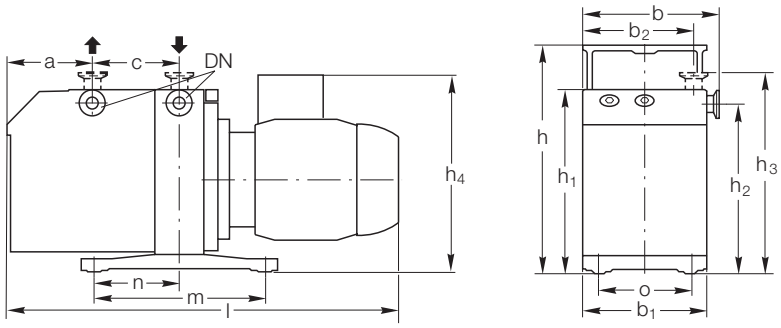

Type	DN		a	b	b_1	b_2	c	h	h_1	h_2	h_3	h_4 [1]	l [1]	m	n	o
D 4 B (Part No. 112 45)	16 KF	mm	75	162	147	132	100	265	215	200	230	234	441	198	99	108
		in.	2.95	6.38	5.79	5.23	3.94	10.43	8.46	7.87	9.06	9.21	17.36	7.80	3.90	4.25
D 8 B (Part No. 112 55)	16 KF	mm	100	162	147	132	100	265	215	200	230	234	465	198	99	108
		in.	3.94	6.38	5.79	5.23	3.94	10.43	8.46	7.87	9.06	9.21	18.31	7.80	3.90	4.25

[1] For dimensions h_4 and l for further part numbers, see paragraph “Motor Dependent Data for the TRIVAC B, BCS and BCS-PFPE”

Dimensional drawing for the TRIVAC D 4 B and D 8 B

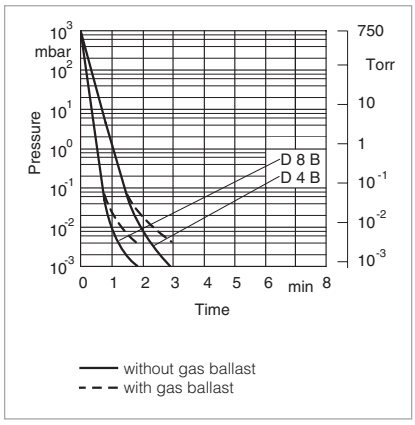

Pump-down characteristics of a 10 l vessel at 50 Hz

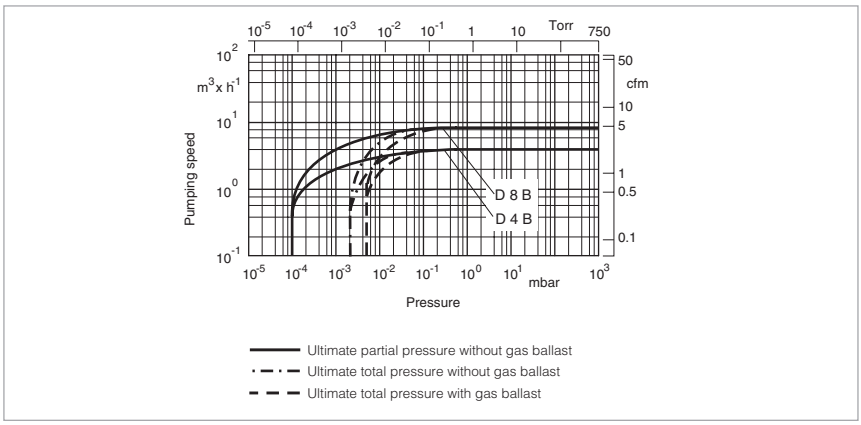

Pumping speed characteristics at 50 Hz (60 Hz curves at the end of the chapter)

Technical Data

		TRIVAC D 4 B two-stage		TRIVAC D 8 B two-stage	
		50 Hz	60 Hz	50 Hz	60 Hz
Nominal pumping speed [1]	m^3/h (cfm)	4.8 (2.8)	5.8 (3.4)	9.7 (5.7)	11.6 (6.9)
Pumping speed [1]	m^3/h (cfm)	4.2 (2.5)	5.0 (3.0)	8.5 (5)	10.2 (6)
Ultimate partial pressure without gas ballast [1]	mbar (Torr)	10^{-4} (0.75 x 10^{-4})	10^{-4} (0.75 x 10^{-4})	10^{-4} (0.75 x 10^{-4})	10^{-4} (0.75 x 10^{-4})
Ultimate total pressure without gas ballast [1]	mbar (Torr)	< 2 x 10^{-3} (< 1.5 x 10^{-3})	< 2 x 10^{-3} (< 1.5 x 10^{-3})	< 2 x 10^{-3} (< 1.5 x 10^{-3})	< 2 x 10^{-3} (< 1.5 x 10^{-3})
Ultimate total pressure with gas ballast [1]	mbar (Torr)	< 5 x 10^{-3} (< 3.8 x 10^{-3})	< 5 x 10^{-3} (< 3.8 x 10^{-3})	< 5 x 10^{-3} (< 3.8 x 10^{-3})	< 5 x 10^{-3} (< 3.8 x 10^{-3})
Water vapor tolerance [1]	mbar (Torr)	30.0 (22.5)	30.0 (22.5)	25.0 (18.8)	25.0 (18.8)
Water vapor capacity	g/h (lbs/h)	93 (0.205)	110 (0.243)	160 (0.353)	190 (0.419)
Oil filling, min. / max.	l (qt)	0.3 / 0.8 (0.3 / 0.85)	0.3 / 0.8 (0.3 / 0.85)	0.3 / 0.9 (0.3 / 0.95)	0.3 / 0.9 (0.3 / 0.95)
Noise level [2] to DIN 45 635, without / with gas ballast	dB(A)	50 / 52	50 / 52	50 / 52	50 / 52
Admissible ambient temperature	°C (°F)	+12 to +40 (+54 to +104)	+12 to +40 (+54 to +104)	+12 to +40 (+54 to +104)	+12 to +40 (+54 to +104)
Motor rating [2]	W (HP)	370 (0.50)	370 (0.50)	370 (0.50)	370 (0.50)
Nominal speed	rpm	1500	1800	1500	1800
Type of protection	IP	[3]	[3]	[3]	[3]
Weight [2]	kg (lbs)	18.7 (41.2)	18.7 (41.2)	21.2 (46.7)	21.2 (46.7)
Connections, Intake and Exhaust	DN	16 KF	16 KF	16 KF	16 KF

[1] To DIN 28 400 and following numbers

[2] Motor rating and noise levels for the pumps with AC motor 50 Hz.
Any data that deviate from the above for pumps with other motors, and other motor-dependent data are given in chapter “Products”, paragraph “Motor Dependent Data for the TRIVAC B, BCS and BCS-PFPE”.

[3] See paragraph “Motor Dependent Data for the TRIVAC B, BCS and BCS-PFPE”.

Ordering Information

	TRIVAC D 4 B two-stage	TRIVAC D 8 B two-stage
	Part No.	**Part No.**
TRIVAC B with 1-phase motor 230 V, 50 Hz [1]	**112 45**	**112 55**
with dual voltage motor [2] 110-115/210-230 V, 50/60 Hz	**140 081**	**140 082**
with 3-phase motor 200 – 240/380 – 400 V, 50 Hz / 200 – 240/380 – 480 V, 60 Hz [1]	**112 46**	**112 56**
219 – 242 V / 380 – 420 V, 50Hz, ATEX Category 3 inside and 3 outside II 3/3G EX h IIC T4 (50 Hz) Gc / EX h IIC T3 (50 Hz) Gc (12°C ≤ Ta ≤ 40°C)	**140 140**	**140 150**
Mains cord for dual voltage motor [2]		
230 V Schuko plug	**E20081091**	**E20081091**
230 V UK plug	**E20081097**	**E20081097**
230 V CH plug	**E20081099**	**E20081099**
230 V NEMA plug (200-240 V)	**E20081141**	**E20081141**
115 V NEMA plug (100-120 V)	**E20081090**	**E20081090**
Transition connector (250 V AC, 10 A, L+N+PE) only necessary in Switzerland for 1~ pumps	**800 001 274**	**800 001 274**
Accessories		
Dust filter		
Filter pot FH 16	**140 116 T**	**140 116 T**
Dust filter insert DF 16-25	**140 117 S**	**140 117 S**
Adsorption trap		
Filter pot FH 16	**140 116 T**	**140 116 T**
Adsorption filter insert RF 16-25	**140 118 A**	**140 118 A**
Accessories for dust filter and adsorption trap		
Active charcoal	**178 10**	**178 10**
Zeolite	**854 20**	**854 20**
Activated aluminium oxide, 1.3 kg (2 l approx.)	**854 10**	**854 10**
TK 4-8 cold trap	**188 20**	**188 20**
AF 4-8 exhaust filter	**189 06**	**189 06**
AR 4-8 exhaust filter with lubricant return	**189 20**	**189 20**
AK 4-8 condensate trap	**188 06**	**188 06**
OF 4-25 mechanical oil filter	**101 91**	**101 91**
CF 4-25 chemical oil filter	**101 96**	**101 96**
Connector for gas ballast inlet M 16 x 1.5 – DN 16 KF	**168 40V01**	**168 40V01**
Oil drain tap M 16 x 1.5	**190 90**	**190 90**
Spare Parts		
Inner body	**E 200 10 989**	**E 200 10 991**
Major maintenance kit (without oil)	**EK 110 002 622**	**EK 110 002 620**
Minor maintenance kit (without oil)	**EK 110 002 628**	**EK 110 002 627**
Shaft sealing replacement kit	**EK 110 002 631**	**EK 110 002 631**
Small parts kit	**EK 110 002 634**	**EK 110 002 634**
Seal kit	**197 20**	**197 20**

For further accessories see section “Accessories for TRIVAC E, B and BCS”

[1] Certification after 2014/34/EU (ATEX), Category 3 inside. II 3/-G Ex h IIC T4 (50 Hz) Gc, II 3/-G Ex h IIC T3 (60 Hz) Gc, (12°C≤Ta≤40°C)
[2] Mains cord 20081091 (Schuko) in delivery included. Other mains cords must be ordered additionally.

Notes

TRIVAC D 16 B and D 25 B

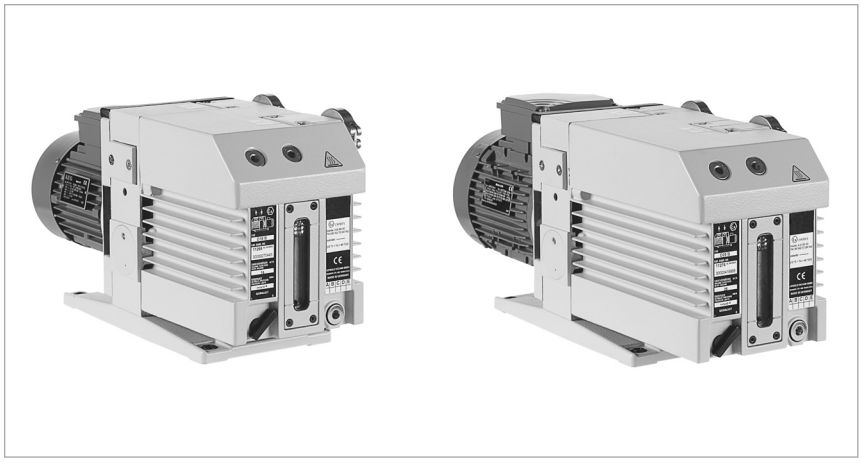

TRIVAC D 16 B (left) and TRIVAC D 25 B (right)

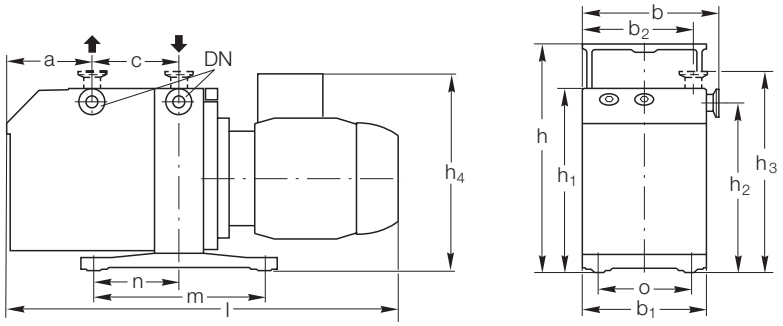

Type	DN		a	b	b_1	b_2	c	h	h_1	h_2	h_3	h_4 [1]	l [1]	m	n	o
D 16 B (Part No. 112 66)	25 KF	mm	82	186	172	151	135	298	248	227	262	250	508	280	140	132
		in.	3.23	7.32	6.77	5.94	5.32	11.73	9.76	8.94	10.31	9.84	20.00	11.02	5.51	5.20
D 25 B (Part No. 112 76)	25 KF	mm	144	186	172	151	135	298	248	227	262	250	570	280	140	132
		in.	5.67	7.32	6.77	5.94	5.32	11.73	9.76	8.94	10.31	9.84	22.44	11.02	5.51	5.20

[1] For dimensions h_4 and l for further part numbers, see paragraph “Motor Dependent Data for the TRIVAC B, BCS and BCS-PFPE”

Dimensional drawing for the TRIVAC D 16 and D 25 B

Technical Data

		TRIVAC D 16 B two-stage		TRIVAC D 25 B two-stage	
		50 Hz	60 Hz	50 Hz	60 Hz
Nominal pumping speed [1]	m^3/h (cfm)	18.9 (11.1)	22.7 (13.4)	29.5 (17.4)	35.4 (20.9)
Pumping speed [1]	m^3/h (cfm)	16.5 (9.7)	19.8 (11.7)	25.7 (15.1)	30.8 (18.2)
Ultimate partial pressure without gas ballast [1]	mbar (Torr)	10^{-4} (0.75×10^{-4})	10^{-4} (0.75×10^{-4})	10^{-4} (0.75×10^{-4})	10^{-4} (0.75×10^{-4})
Ultimate total pressure without gas ballast [1]	mbar (Torr)	$< 2 \times 10^{-3}$ ($< 1.5 \times 10^{-3}$)	$< 2 \times 10^{-3}$ ($< 1.5 \times 10^{-3}$)	$< 2 \times 10^{-3}$ ($< 1.5 \times 10^{-3}$)	$< 2 \times 10^{-3}$ ($< 1.5 \times 10^{-3}$)
Ultimate total pressure with gas ballast [1]	mbar (Torr)	$< 5 \times 10^{-3}$ ($< 3.8 \times 10^{-3}$)	$< 5 \times 10^{-3}$ ($< 3.8 \times 10^{-3}$)	$< 5 \times 10^{-3}$ ($< 3.8 \times 10^{-3}$)	$< 5 \times 10^{-3}$ ($< 3.8 \times 10^{-3}$)
Water vapor tolerance [1]	mbar (Torr)	25.0 (18.8)	25.0 (18.8)	25.0 (18.8)	25.0 (18.8)
Water vapor capacity	g/h (lbs/h)	305 (0.672)	370 (0.816)	476 (1.049)	570 (1.257)
Oil filling, min. / max.	l (qt)	0.5 / 1.0 (0.5 / 1.1)	0.5 / 1.0 (0.5 / 1.1)	0.6 / 1.4 (0.6 / 1.5)	0.6 / 1.4 (0.6 / 1.5)
Noise level [2] to DIN 45 635, without / with gas ballast	dB(A)	54 / 56	54 / 56	54 / 56	54 / 56
Admissible ambient temperature	°C (°F)	+12 to +40 (+54 to +104)	+12 to +40 (+54 to +104)	+12 to +40 (+54 to +104)	+12 to +40 (+54 to +104)
Motor rating [2]	W (HP)	750 (1)	750 (1)	750 (1)	750 (1)
Nominal speed	rpm	1425	1730	1425	1730
Type of protection	IP	[3]	[3]	[3]	[3]
Weight [2]	kg (lbs)	28 (61.7)	28 (61.7)	32.3 (71.2)	32.3 (71.2)
Connections, Intake and Exhaust	DN	25 KF	25 KF	25 KF	25 KF

[1] To DIN 28 400 and following numbers
[2] Motor rating and noise levels for the pumps with AC motor 50 Hz.
Any data that deviate from the above for pumps with other motors, and other motor-dependent data are given in chapter “Products”, paragraph “Motor Dependent Data for the TRIVAC B, BCS and BCS-PFPE”.
[3] See paragraph “Motor Dependent Data for the TRIVAC B, BCS and BCS-PFPE”.

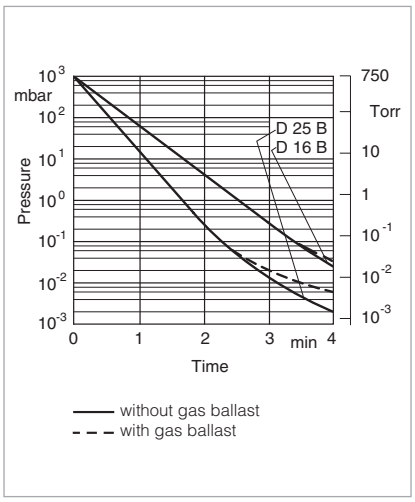

Pump-down characteristics of a 100 l vessel at 50 Hz

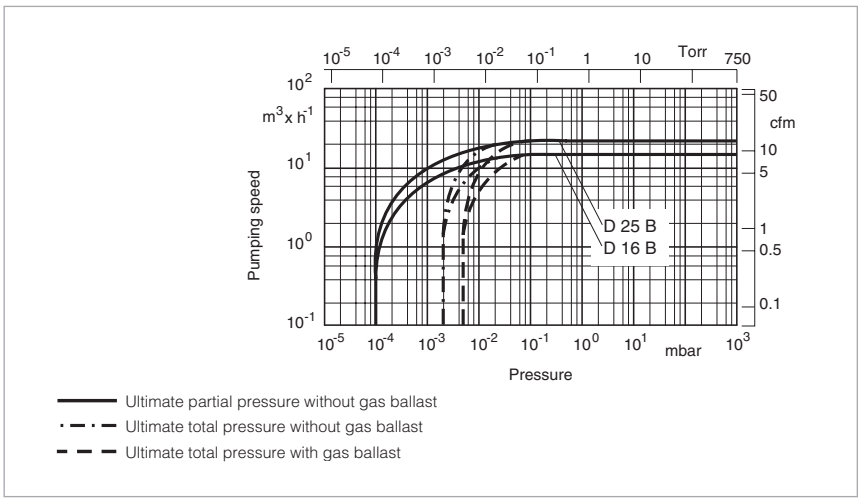

Pumping speed characteristics at 50 Hz (60 Hz curves at the end of the chapter)

Ordering Information

	TRIVAC D 16 B two-stage	TRIVAC D 25 B two-stage
	Part No.	**Part No.**
TRIVAC B with 1-phase motor 218 – 242 V, 50/60 Hz [1] 208 – 252 V, 50/60 Hz [1] 110/220 V, 50 Hz / 115/208 – 230 V, 60 Hz [3]	 **112 65** **113 25** [2] **898 698**	 **112 75** **113 35** [2] **–**
with 3-phase motor 200 – 240 V (200 V IE3) / 380 – 400 V (380 – 400 V IE3), 50 Hz / 200 – 240 (208 – 240 V IE3) / 380 – 480 V (416 – 480 V IE3), 60 Hz [1]	**112 66** **113 33 (LVO 210)**	**112 76**
180 – 220 V (200 V IE3, Japan)/ 311 – 380 V (346 V IE3, Japan), 50Hz/ 200 – 240 V (220 V IE3, Japan)/ 342 – 418 V 380 V IE3, Japan), 60Hz	**112 66J (LVO 100)** **113 33J (LVO 210)**	**112 76J (LVO 100)** **-**
219 – 242 / 380 – 420 V, 50 Hz, ATEX Category 3 inside and 3 outside II 3/3G EX h IIC T4 (50 Hz) Gc / EX h IIC T3 (50 Hz) Gc (12°C ≤ Ta ≤ 40°C)	**140 160**	**140 170**
Accessories		
Mains cord for Part No. 898 698 115 V 230 V	 **E 721 27 874** **E 721 27 875**	 **–** **–**
Dust filter Filter pot FH 16 Dust filter insert DF 16-25	 **140 125 T** **140 117 S**	 **140 125 T** **140 117 S**
Adsorption trap Filter pot FH 25 Adsorption filter insert RF 16-25	 **140 125 T** **140 118 A**	 **140 125 T** **140 118 A**
Accessories for dust filter and adsorption trap Active charcoal Zeolite Activated aluminium oxide, 1.3 kg (2 l approx.)	 **178 10** **854 20** **854 10**	 **178 10** **854 20** **854 10**
AF 16-25 exhaust filter	**189 11**	**189 11**
AR 16-25 exhaust filter with lubricant return	**189 21**	**189 21**
AK 16-25 condensate trap	**188 11**	**188 11**
OF 4-25 mechanical oil filter	**101 91**	**101 91**
CF 4-25 chemical oil filter	**101 96**	**101 96**
Connector for gas ballast inlet M 16 x 1.5 – DN 16 KF	**168 40V01**	**168 40V01**
Oil drain tap M 16 x 1.5	**190 90**	**190 90**
Spare Parts		
Inner body	**E 200 10 956**	**E 200 10 960**
Major maintenance kit (without oil)	**EK 110 002 618**	**EK 110 002 616**
Minor maintenance kit (without oil)	**EK 110 002 626**	**EK 110 002 625**
Shaft sealing ring replacement kit	**EK 110 002 630**	**EK 110 002 630**
Small parts kit	**EK 110 002 635**	**EK 110 002 635**
Seal kit	**197 21**	**197 21**

For further accessories see section “Accessories for TRIVAC E, B and BCS”

[1] Certification after 2014/34/EU (ATEX), Category 3 inside. II 3/-G Ex h IIC T4 (50 Hz) Gc, II 3/-G Ex h IIC T3 (60 Hz) Gc, (12°C≤Ta≤40°C)
[2] With cable EURO Schuko. Other cables for wide range motor upon request.
[3] Mains cord for dual voltage motor see paragraph “Motor Dependent Data for the TRIVAC B, BCS and BCS-PFPE”; TRIVAC D 16 B / D 25 B

Only available for purchase in North and South America

Ordering Information	TRIVAC D 16 B two-stage	TRIVAC D 25 B two-stage
	Part No.	**Part No.**
TRIVAC B with 1-phase motor 115 V / 208 – 230 V, 50 Hz, NEMA plug / 115 V / 208 – 230 V, 60 Hz, NEMA plug	**912 65-1**	**–**
208 – 230 V, 50/60 Hz, NEMA plug	**912 65-2**	**–**
208 – 230 V, 50/0 Hz, NEMA plug	**–**	**912 75-2**

TRIVAC D 40 B and D 65 B

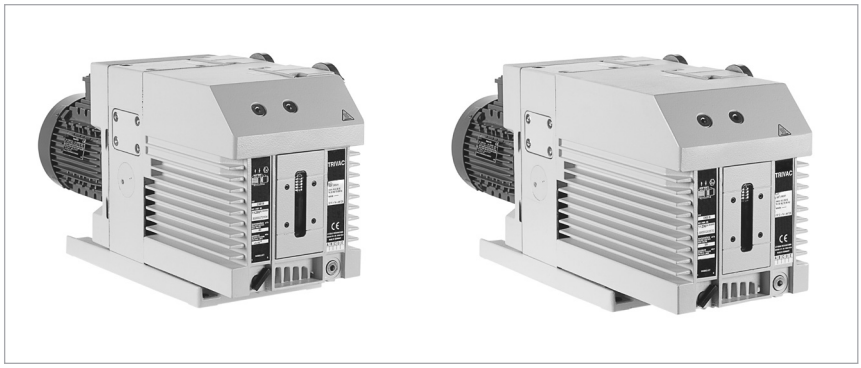

TRIVAC D 40 B (left) and TRIVAC D 65 B (right)

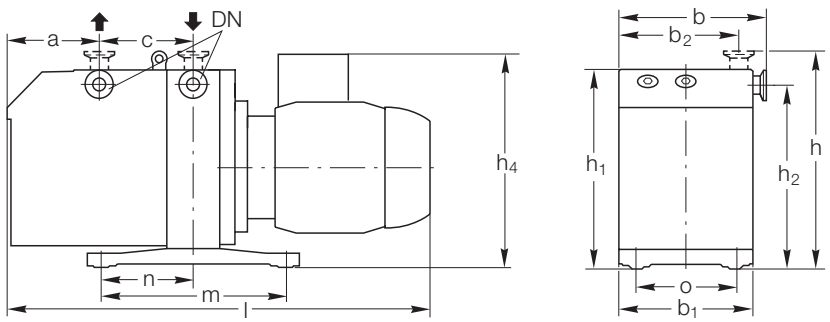

Type	DN		a	b	b_1	b_2	c	h	h_1	h_2	h_4 [1]	l [1]	m	n	o
D 40 B (Part No. 112 86)	40 KF	mm	136	255	235	208	166	357	337	310	317	720	382	191	190
		in.	5.35	10.40	9.25	8.19	6.54	14.06	13.27	12.20	12.48	28.35	15.04	7.52	7.48
D 65 B (Part No. 112 96)	40 KF	mm	214	255	235	208	166	357	337	310	317	797	382	191	190
		in.	8.46	10.40	9.25	8.19	6.54	14.06	13.27	12.20	12.48	31.38	15.04	7.52	7.48

[1] For dimensions h_4 and l for further part numbers, see paragraph “Motor Dependent Data for the TRIVAC B, BCS and BCS-PFPE”

Dimensional drawing for the TRIVAC D 40 and D 65 B

Technical Data

		TRIVAC D 40 B two-stage		TRIVAC D 65 B two-stage	
		50 Hz	60 Hz	50 Hz	60 Hz
Nominal pumping speed [1]	m^3/h (cfm)	46 (27)	55 (32.5)	75 (44)	90 (53)
Pumping speed [1]	m^3/h (cfm)	40 (24)	48 (28)	65 (38)	78 (46)
Ultimate partial pressure without gas ballast [1]	mbar (Torr)	10^{-4} (0.75×10^{-4})	10^{-4} (0.75×10^{-4})	10^{-4} (0.75×10^{-4})	10^{-4} (0.75×10^{-4})
Ultimate total pressure without gas ballast [1]	mbar (Torr)	$< 2 \times 10^{-3}$ ($< 1.5 \times 10^{-3}$)	$< 2 \times 10^{-3}$ ($< 1.5 \times 10^{-3}$)	$< 2 \times 10^{-3}$ ($< 1.5 \times 10^{-3}$)	$< 2 \times 10^{-3}$ ($< 1.5 \times 10^{-3}$)
Ultimate total pressure with gas ballast [1]	mbar (Torr)	$< 5 \times 10^{-3}$ ($< 3.8 \times 10^{-3}$)	$< 5 \times 10^{-3}$ ($< 3.8 \times 10^{-3}$)	$< 5 \times 10^{-3}$ ($< 3.8 \times 10^{-3}$)	$< 5 \times 10^{-3}$ ($< 3.8 \times 10^{-3}$)
Water vapor tolerance [1]	mbar (Torr)	40 (30)	40 (30)	40 (30)	40 (30)
Water vapor capacity	g/h (lbs/h)	1184 (2.610)	1420 (3.131)	1925 (4.244)	2310 (5.093)
Oil filling, min. / max.	l (qt)	1.7 / 2.6 (1.8 / 2.7)	1.7 / 2.6 (1.8 / 2.7)	2.0 / 3.3 (2.1 / 3.5)	2.0 / 3.3 (2.1 / 3.5)
Noise level [2] to DIN 45 635, without / with gas ballast	dB(A)	57 / 59	57 / 59	57 / 59	57 / 59
Admissible ambient temperature	°C (°F)	+12 to +40 (+54 to +104)	+12 to +40 (+54 to +104)	+12 to +40 (+54 to +104)	+12 to +40 (+54 to +104)
Motor rating [2]	W (HP)	2200 (3.0)	2200 (3.0)	2200 (3.0)	2200 (3.0)
Nominal speed	rpm	1460	1760	1460	1760
Type of protection	IP	[3]	[3]	[3]	[3]
Weight [2]	kg (lbs)	75.3 (166)	75.3 (166)	84.5 (186.3)	84.5 (186.3)
Connections, Intake and Exhaust	DN	40 KF	40 KF	40 KF	40 KF

[1] To DIN 28 400 and following numbers
[2] Motor rating and noise levels for the pumps with AC motor 50 Hz.
Any data that deviate from the above for pumps with other motors, and other motor-dependent data are given in chapter “Products”, paragraph “Motor Dependent Data for the TRIVAC B, BCS and BCS-PFPE”.
[3] See paragraph “Motor Dependent Data for the TRIVAC B, BCS and BCS-PFPE”.

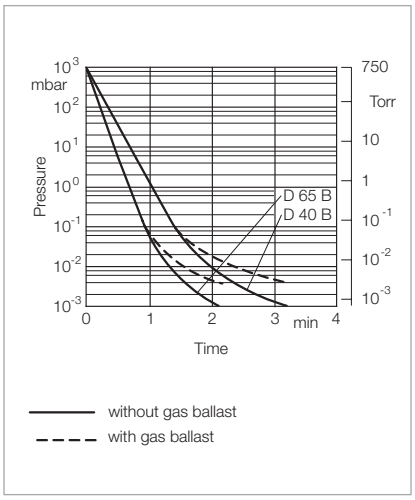

Pump-down characteristics of a 100 l vessel at 50 Hz

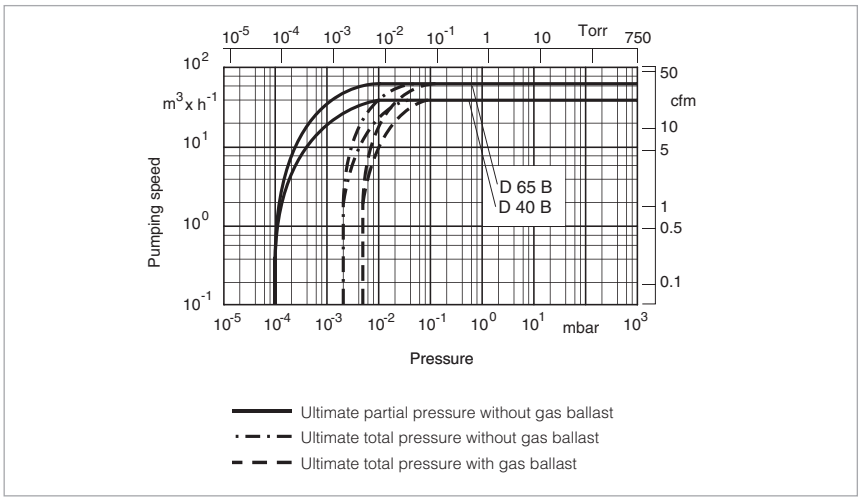

Pumping speed characteristics at 50 Hz (60 Hz curves at the end of the chapter)

Ordering Information

	TRIVAC D 40 B two-stage	TRIVAC D 65 B two-stage
	Part No.	**Part No.**
TRIVAC B with 3-phase motor 200 – 240 V (200 V IE3) / 380 – 400 V (380 – 400 V IE3), 50 Hz / 200 – 240 V (208 – 240 V IE3) / 400 – 480 V (416 – 480 V IE3), 60 Hz [1]	**112 86**	**112 96**
180 – 220 V (200 V IE3 Japan) / 311 – 380 V (346 V IE3 Japan), 50 Hz / 200 – 240 V (220 V IE3 Japan) / 342 – 418 V (380 V IE3 Japan), 60 Hz	**112 86J**	**112 96J**
219 – 242/380 – 420 V, 50 Hz ATEX Category 3 inside and 3 outside II 3/3G EX h IIC T4 (50 Hz) Gc / EX h IIC T3 (50 Hz) Gc (12°C ≤ Ta ≤ 40°C)	**140 180**	**140 190**
Accessories		
Roots pump adaptor	**168 30**	**168 30**
AS 30-60 dust separator	**186 16**	**186 16**
Dust filter Filter pot FH 40-65 Dust filter insert DF 40-65	 **140 140 T** **140 141 S**	 **140 140 T** **140 141 S**
Adsorption trap Filter pot FH 40-65 Adsorption filter insert RF 40-65	 **140 140 T** **140 142 A**	 **140 140 T** **140 142 A**
Accessories for dust filter and adsorption trap Active charcoal Zeolite Activated aluminium oxide, 1.3 kg (2 l approx.)	 **178 10** **854 20** **854 10**	 **178 10** **854 20** **854 10**
AF 40-65 exhaust filter	**189 16**	**189 16**
AR 40-65 exhaust filter with lubricant return	**189 22**	**189 22**
AK 40-65 condensate trap	**188 16**	**188 16**
OF 40-65 mechanical oil filter	**101 92**	**101 92**
CF 40-65 chemical oil filter	**101 97**	**101 97**
Connector for gas ballast inlet M 16 x 1.5 – DN 16 KF	**168 40V01**	**168 40V01**
Oil drain tap M 16 x 1.5	**190 90**	**190 90**
Spare Parts		
Inner body	**E 200 10 933**	**E 200 10 944**
Major maintenance kit (without oil)	**EK 110 002 613**	**EK 110 002 612**
Minor maintenance kit (without oil)	**EK 110 002 624**	**EK 110 002 624**
Shaft sealing ring replacement kit	**EK 110 002 629**	**EK 110 002 629**
Small parts kit	**EK 110 002 636**	**EK 110 002 636**
Seal kit	**197 22**	**197 22**

For further accessories see section “Accessories for TRIVAC E, B and BCS”

[1] Certification after 2014/34/EU (ATEX), Category 3 inside. II 3/-G Ex h IIC T4 (50 Hz) Gc, II 3/-G Ex h IIC T3 (60 Hz) Gc, (12°C≤Ta≤40°C)

Notes

TRIVAC D 16 B-DOT to D 40 B-DOT

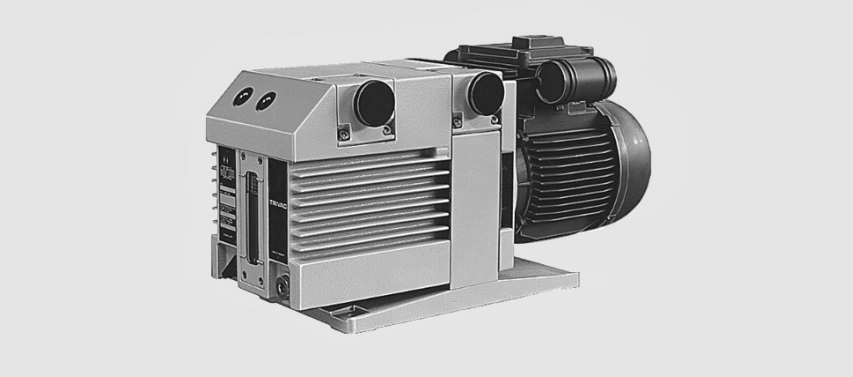

TRIVAC D 16 B-DOT

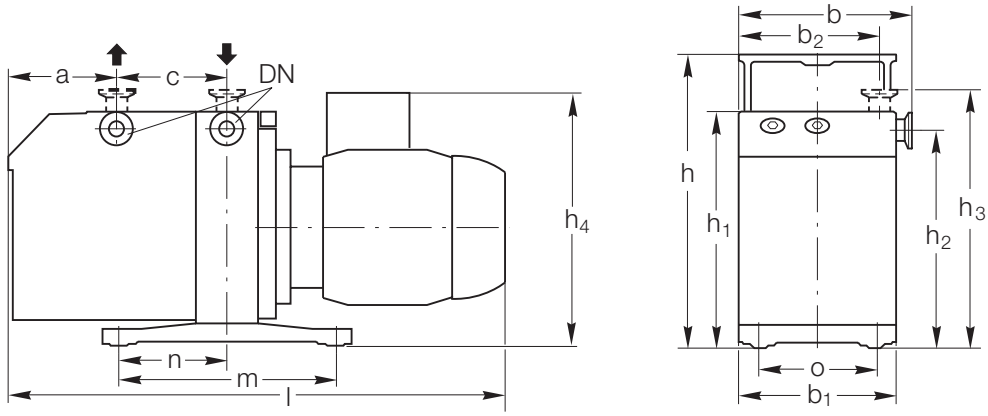

Type	DN		a	b	b_1	b_2	c	h	h_1	h_2	h_3	h_4	l	m	n	o
D 16 B-DOT (Part No. 114 06, 114 10)	25 KF	mm	82	186	172	151	136	298	248	227	262	260	508	280	140	132
		in.	3.23	7.32	6.77	5.94	5.32	11.73	9.76	8.94	10.31	10.24	20.00	11.02	5.51	5.20
D 25 B-DOT (Part No. 112 7 618)	25 KF	mm	144	186	172	151	135	298	248	227	262	260	570	280	140	132
		in.	5.67	7.32	6.77	5.94	5.32	11.73	9.76	8.94	10.31	10.24	22.44	11.02	5.51	5.20
D 40 B-DOT (Part No. 112 8 612)	40 KF	mm	136	255	235	208	166	–	339	310	315	317	719	382	191	190
		in.	5.35	10.40	9.25	8.19	6.54	–	13.35	12.20	12.83	12.48	28.31	15.04	7.52	7.48

Dimensional drawing for the TRIVAC D B-DOT pumps

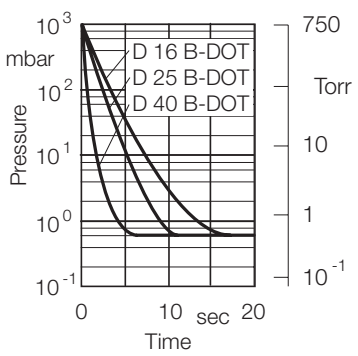

Pump-down characteristics of a 10 l vessel at 50 Hz

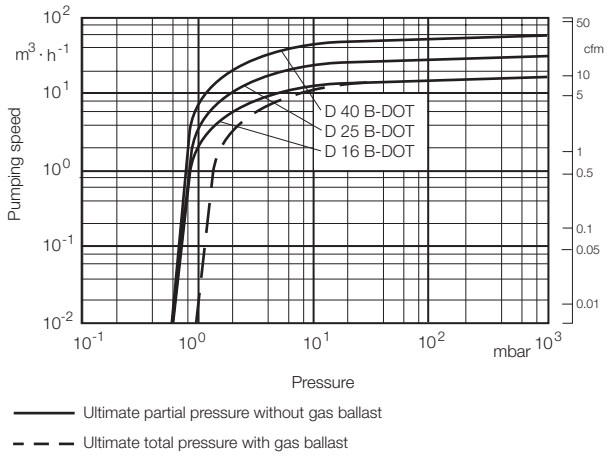

Pumping speed characteristics at 50 Hz (60 Hz curves at the end of the chapter)

Technical Data

		TRIVAC D 16 B-DOT two-stage	
		50 Hz	60 Hz
Nominal pumping speed [1]	m^3/h (cfm)	18.9 (11.1)	22.7 (13.4)
Pumping speed [1]	m^3/h (cfm)	16.5 (9.7)	19.8 (11.7)
Ultimate total pressure without gas ballast [1]	mbar (Torr)	$< 6 \times 10^{-1}$ ($< 4.5 \times 10^{-1}$)	$< 6 \times 10^{-1}$ ($< 4.5 \times 10^{-1}$)
Ultimate total pressure with gas ballast [1]	mbar (Torr)	$< 9 \times 10^{-1}$ ($< 6.75 \times 10^{-1}$)	$< 9 \times 10^{-1}$ ($< 6.75 \times 10^{-1}$)
Water vapor tolerance [1]	mbar (Torr)	25.0 (18.8)	25.0 (18.8)
Water vapor capacity	g/h (lbs/h)	305 (0.672)	370 (0.816)
Brake fluid filling, min. / max.	l (qt)	0.45 / 1.0 (0.5 / 1.1)	0.45 / 1.0 (0.5 / 1.1)
Noise level [2] to DIN 45 635, without / with gas ballast	dB(A)	54 / 56	54 / 56
Admissible ambient temperature	°C (°F)	+12 to +40 (+54 to +104)	+12 to +40 (+54 to +104)
Motor rating	W (HP)	750 (1)	750 (1)
Nominal speed	rpm	1425	1730
Type of protection	IP	[2]	[2]
Weight [2]	kg (lbs)	28.2 (62.2)	28.2 (62.2)
Connections, Intake and Exhaust	DN	25 KF	25 KF

[1] To DIN 28 400 and following numbers
[3] See paragraph "Motor Dependent Data for the TRIVAC B, BCS and BCS-PFPE".

Ordering Information

	TRIVAC D 16 B-DOT two-stage
	Part No.
TRIVAC B-DOT with 3-phase motor 200 – 240 V (200 V IE3) / 380 – 400 V (380 – 400 V IE3), 50 Hz / 200 – 240 (208 – 240 V IE3) / 380 – 480 V (416 – 480 V IE3), 60 Hz	**114 06** **114 10 (with limit switch system LSS 16-25)**
AF 16-25 DOT exhaust filter	**124 16**
AK DOT condensate trap	**110 78**
Major maintenance kit 16 DOT (without oil)	**EK110002100**

Technical Data

		TRIVAC D 25 B-DOT two-stage	
		50 Hz	60 Hz
Nominal pumping speed [1]	m^3/h (cfm)	29.5 (17.4)	35.4 (20.9)
Pumping speed [1]	m^3/h (cfm)	25.7 (17.4)	30.8 (18.2)
Ultimate total pressure without gas ballast [1]	mbar (Torr)	$< 6 \times 10^{-1}$ ($< 4.5 \times 10^{-1}$)	$< 6 \times 10^{-1}$ ($< 4.5 \times 10^{-1}$)
Ultimate total pressure with gas ballast [1]	mbar (Torr)	$< 9 \times 10^{-1}$ ($< 6.75 \times 10^{-1}$)	$< 9 \times 10^{-1}$ ($< 6.75 \times 10^{-1}$)
Water vapor tolerance [1]	mbar (Torr)	25.0 (18.8)	25.0 (18.8)
Water vapor capacity	g/h (lbs/h)	476 (1.049)	570 (1.257)
Brake fluid filling, min. / max.	l (qt)	0.6 / 1.4 (6.3 / 1.5)	0.6 / 1.4 (6.3 / 1.5)
Noise level [2] to DIN 45 635, without / with gas ballast	dB(A)	54 / 56	54 / 56
Admissible ambient temperature	°C (°F)	+12 to +40 (+54 to +104)	+12 to +40 (+54 to +104)
Motor rating	W (HP)	750 (1)	750 (1)
Nominal speed	rpm	1425	1730
Type of protection	IP	[2]	[2]
Weight [2]	kg (lbs)	32.5 (71.7)	32.5 (71.7))
Connections, Intake and Exhaust	DN	25 KF	25 KF

[1] To DIN 28 400 and following numbers
[3] See paragraph "Motor Dependent Data for the TRIVAC B, BCS and BCS-PFPE".

Ordering Information

	TRIVAC D 25 B-DOT two-stage
	Part No.
TRIVAC B-DOT with 3-phase motor 200 – 240 V (200 V IE3) / 380 – 400 V (380 – 400 V IE3), 50 Hz / 200 – 240 (208 – 240 V IE3) / 380 – 480 V (416 – 480 IE3), 60 Hz	**112 76 18**
180 – 220 V (200 V IE3 Japan) / 311 – 380 (346 V IE3 Japan), 50 Hz / 220 – 240 V (220 V IE3 Japan) / 342 – 418 V (380 V IE3 Japan), 60 Hz	**112 76 18J**
AF 16-25 DOT exhaust filter	**124 16**
AK DOT condensate trap	**110 78**
Major maintenance kit 25 DOT (without oil)	**EK110002101**

Technical Data

		TRIVAC D 40 B-DOT two-stage	
		50 Hz	60 Hz
Nominal pumping speed [1]	m^3/h (cfm)	46.0 (27.0)	55.0 (32.5)
Pumping speed [1]	m^3/h (cfm)	40.0 (24.0)	48.0 (28.0)
Ultimate total pressure without gas ballast [1]	mbar (Torr)	$< 6 \times 10^{-1}$ ($< 4.5 \times 10^{-1}$)	$< 6 \times 10^{-1}$ ($< 4.5 \times 10^{-1}$)
Ultimate total pressure with gas ballast [1]	mbar (Torr)	$< 9 \times 10^{-1}$ ($< 6.75 \times 10^{-1}$)	$< 9 \times 10^{-1}$ ($< 6.75 \times 10^{-1}$)
Water vapor tolerance [1]	mbar (Torr)	40 (30)	40 (30)
Water vapor capacity	g/h (lbs/h)	1184 (2.610)	1420 (3.130)
Brake fluid filling, min. / max.	l (qt)	1.7 / 2.6 (1.8 / 2.7)	1.7 / 2.6 (1.8 / 2.7)
Noise level [2] to DIN 45 635, without / with gas ballast	dB(A)	57 / 59	57 / 59
Admissible ambient temperature	°C (°F)	+12 to +40 (+54 to +104)	+12 to +40 (+54 to +104)
Motor rating	W (HP)	2200 (3.0)	2200 (3.0)
Nominal speed	rpm	1460	1760
Type of protection	IP	[2]	[2]
Weight [2]	kg (lbs)	75.8 (167)	75.8 (167)
Connections, Intake and Exhaust	DN	40 KF	40 KF

[1] To DIN 28 400 and following numbers
[3] See paragraph "Motor Dependent Data for the TRIVAC B, BCS and BCS-PFPE".

Ordering Information

	TRIVAC D 40 B-DOT two-stage
	Part No.
TRIVAC B-DOT with 3-phase motor 200 – 240 V (200 V IE3) / 380 – 400 V (380 – 400 V IE3), 50 Hz / 200 – 240 (208 – 240 V IE3) / 400 – 480 V (416 – 480 V IE3), 60 Hz	**112 86 12**
AF 40 DOT exhaust filter	**101 15**
AK DOT condensate trap	**upon request**
Major maintenance kit 40 DOT (without oil)	**EK110002102**

TRIVAC D 65 B ^{3}He

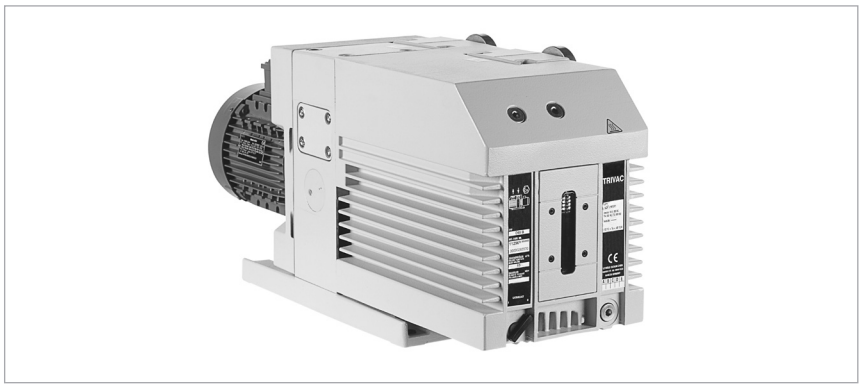

TRIVAC D 65 B ^{3}He

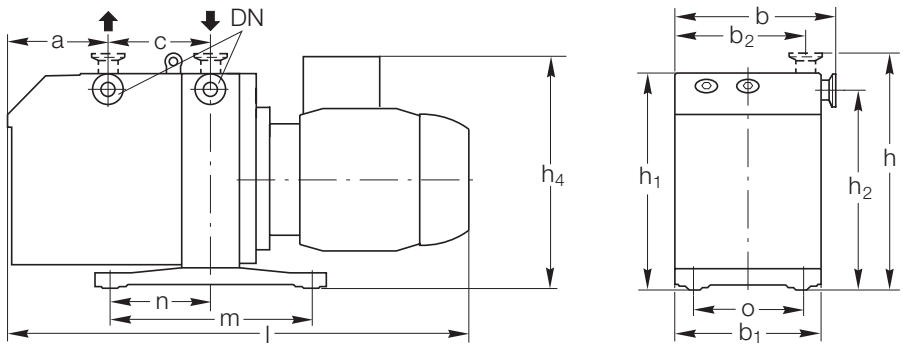

Type	DN		a	b	b_1	b_2	c	h	h_1	h_2	h_3	l	m	n	o
D 65 B ^{3}He	40 KF	mm	214	255	235	208	166	357	339	310	317	794	382	191	190
		in.	8.46	10.40	9.25	8.19	6.54	14.06	13.35	12.20	12.48	31.26	15.04	7.52	7.48

Dimensional drawing for the TRIVAC D 65 B ^{3}He

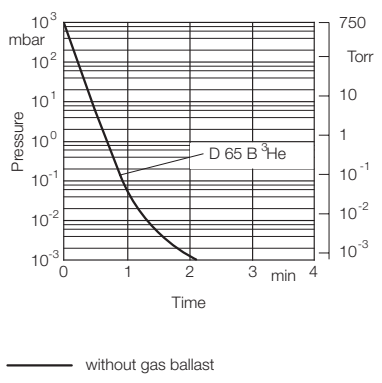

Pump-down characteristics of a 100 l vessel at 50 Hz

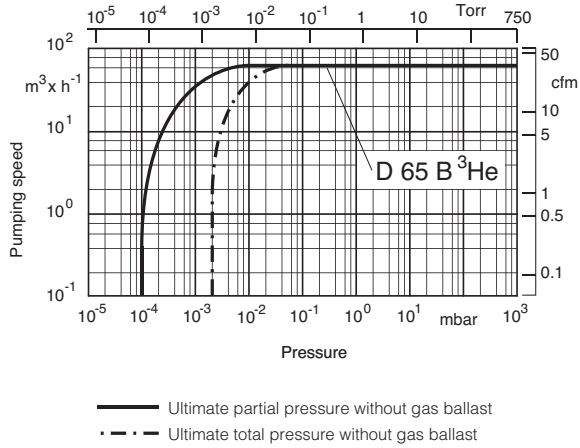

Pumping speed characteristics at 50 Hz (60 Hz curves at the end of the chapter)

Technical Data

		TRIVAC D 65 B ^{3}He	
		50 Hz	60 Hz
Nominal pumping speed [1]	m^3/h (cfm)	75 (44)	90 (53)
Pumping speed [1]	m^3/h (cfm)	65 (38)	78 (46)
Ultimate partial pressure without gas ballast [1]	mbar (Torr)	10^{-4} (0.75×10^{-4})	10^{-4} (0.75×10^{-4})
Ultimate total pressure without gas ballast [1]	mbar (Torr)	$< 2 \times 10^{-3}$ ($< 1.5 \times 10^{-3}$)	$< 2 \times 10^{-3}$ ($< 1.5 \times 10^{-3}$)
Oil filling with LEYBONOL LVO 100, min. / max.	l (qt)	2.0 / 3.3 (2.1 / 3.5)	2.0 / 3.3 (2.1 / 3.5)
Leak rate	mbar x l x sec^{-1}	$< 1.0 \times 10^{-7}$	$< 1.0 \times 10^{-7}$
Noise level [2] to DIN 45 635, without / with gas ballast	dB(A)	57 / 59	57 / 59
Admissible ambient temperature	°C (°F)	+12 to +40 (+54 to +104)	+12 to +40 (+54 to +104)
Motor rating [2]	W (HP)	2200 (3.0)	2200 (3.0)
Nominal speed	rpm	1460	1760
Type of protection	IP	[3]	[3]
Weight [2]	kg (lbs)	84.5 (186.3)	84.5 (186.3)
Connections, Intake and Exhaust	DN	40 KF	40 KF

Ordering Information

TRIVAC D 65 B ^{3}He

	Part No.
TRIVAC B ^{3}He with 3-phase motor 200 – 240 V (200 V IE3) / 380 – 400 V (380 – 400 V IE3), 50 Hz / 200 – 240 (208 – 240 V IE3) / 400 – 480 V (416 – 480 V IE3), 60 Hz	**112 96 46**

[1] To DIN 28 400 and following numbers
[2] Motor rating and noise levels for the pumps with AC motor 50 Hz.
Any data that deviate from the above for pumps with other motors, and other motor-dependent data are given in chapter “Products”, paragraph “Motor Dependent Data for the TRIVAC B, BCS and BCS-PFPE”.
[3] See paragraph “Motor Dependent Data for the TRIVAC B, BCS and BCS-PFPE”.

TRIVAC D 16 B-Ex (Explosion Protected and Pressure Burst Resistant)

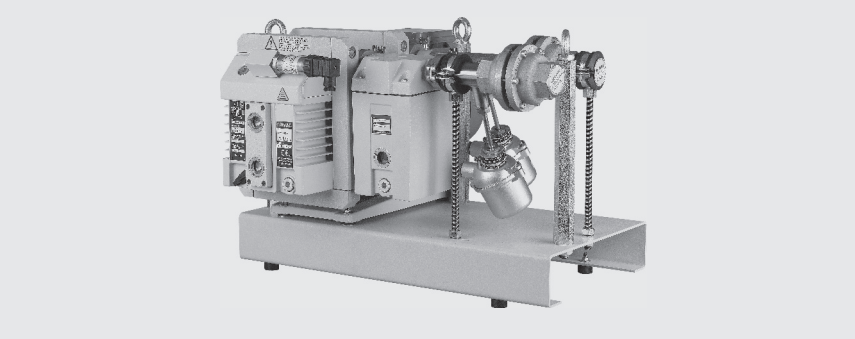

TRIVAC D 16 B-Ex

ATEX

Category 1 inside and 2 outside

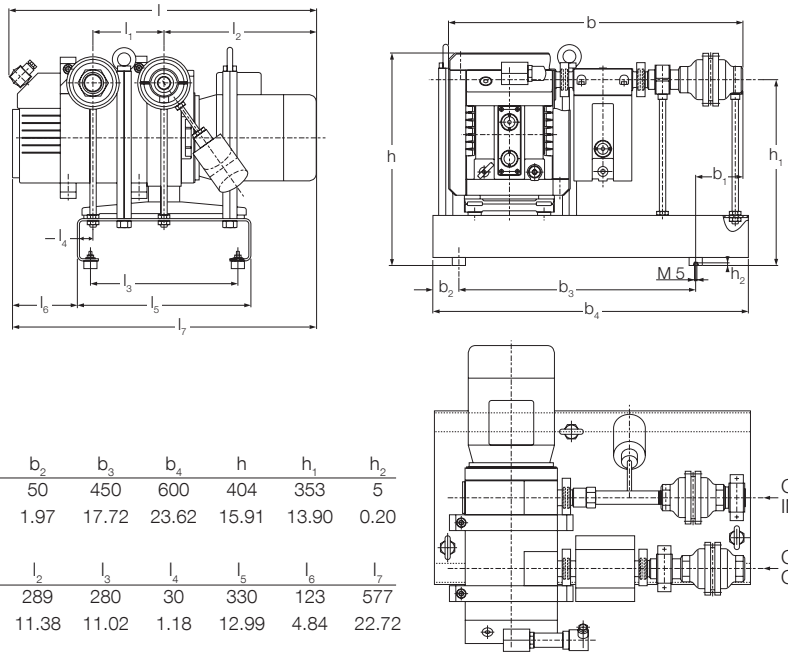

Type		b	b_1	b_2	b_3	b_4	h	h_1	h_2
D 16 B-Ex	mm	559	89.5	50	450	600	404	353	5
	in.	22.01	3.52	1.97	17.72	23.62	15.91	13.90	0.20

		l	l_1	l_2	l_3	l_4	l_5	l_6	l_7
	mm	583	135	289	280	30	330	123	577
	in.	22.95	5.31	11.38	11.02	1.18	12.99	4.84	22.72

Dimensional drawing for the TRIVAC D 16 B-Ex (explosion protected and pressure burst resistant)

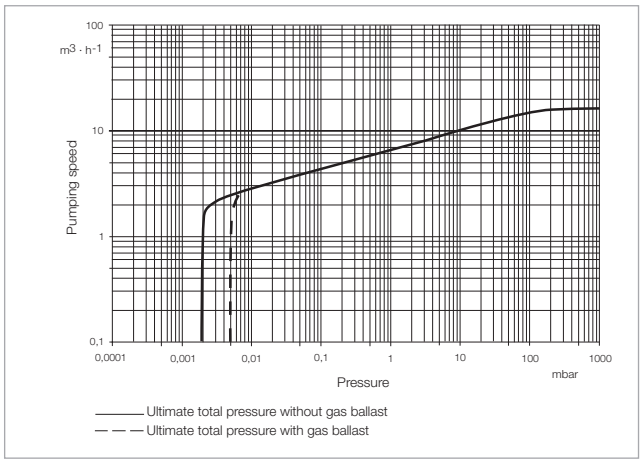

Pumping speed characteristics of TRIVAC D 16 B-Ex [IIB3 T4]
(Part No. 140 091)

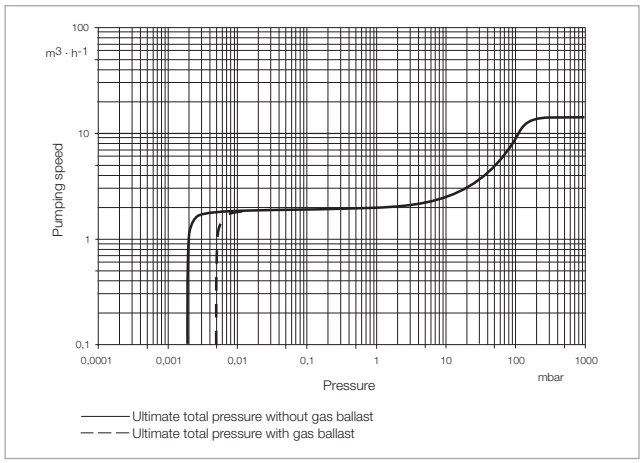

Pumping speed characteristics of TRIVAC D 16 B-Ex [IIC T4]
(Part No. 140 092)

Technical Data

		TRIVAC D 16 B-Ex (Explosion Protected and Pressure Burst Resistant) Two-Stage
Nominal pumping speed	m^3/h (cfm)	18.9 (11.1)
Pumping speed (for Part No. 140 091 / 140 092) [1]	m^3/h (cfm)	16 / 15 (9.4/8.8)
Ultimate partial pressure without gas ballast [1]	mbar (Torr)	1×10^{-4} (< 0.75×10^{-3})
Ultimate total pressure with gas ballast [1]	mbar (Torr)	< 5×10^{-3} (< 3.8×10^{-3})
Water vapor tolerance [1]	mbar (Torr)	25 (18.8)
Water vapor capacity	g/h (lbs/h)	240 (0.529)
Oil filling, min. / max.	l (qt)	0.55 / 1.3 (0.58 / 1.4)
Motor		3~, 230 V / 400 V, 50 Hz, Ex e II T4
Type of protection	IP	55
Maximum gas inlet temperature	°C (°F)	60 (140)
Highest permissible pressure in the oil box	mbar (Torr)	1500 (1125)
Ambient temperature (t_a)	°C (°F)	+12 to +40 (+46 to +104)
Maximum surface temperature	°C (°F)	135 (275)
Max. Inlet pressure	mbar (Torr)	Atmospheric pressure
Weight (complete system)	kg (lbs)	72 (159)
Materials (materials in contact with the gas)		Steel, hardened steel, spring steel, stainless steel, zinc, aluminium and aluminium alloys, grey cast iron 25, FKM, felt, glass, silicone, polyamide
Connections		
Intake side	Inside thread	G 3/4"
Pressure side	Inside thread	G 1"

Ordering Information

	TRIVAC D 16 B-Ex (Explosion Protected and Pressure Burst Resistant) Two-Stage
	Part No.
TRIVAC D 16 B-Ex IIB3 T4 in accordance with 214/34/EU [Ex II 1/2G Ex h IIB3 T4 Ga / Ex h IIC T4 Gb (12°C≤Ta≤ 40°C) EC Type Examination Certificate: IBExU03ATEX1017 X]	**140 091**
TRIVAC D 16 B-Ex IIC T4 [2] in accordance with 214/34/EU [Ex II 1/2G Ex h IIC (no C_2H_2, CS_2) T4 Ga / Ex h IIC T4 Gb (12°C≤Ta≤ 40°C) EC Type Examination Certificate: IBExU03ATEX1016 X]	**140 092** [2]

[1] To DIN 28 400 and following numbers
[2] with the exception of acetylene and carbon bisulphide

For all enquiries and orders relating to category 1 and 2 ATEX products please exclusively use our ATEX questionnaire. You can find this questionnaire at the end of the full-line catalog together with the fax forms or on the Internet under "www.leybold.com" under Downloads in the area Media.

TRIVAC BCS,
Two-Stage Rotary Vane Vacuum Pumps

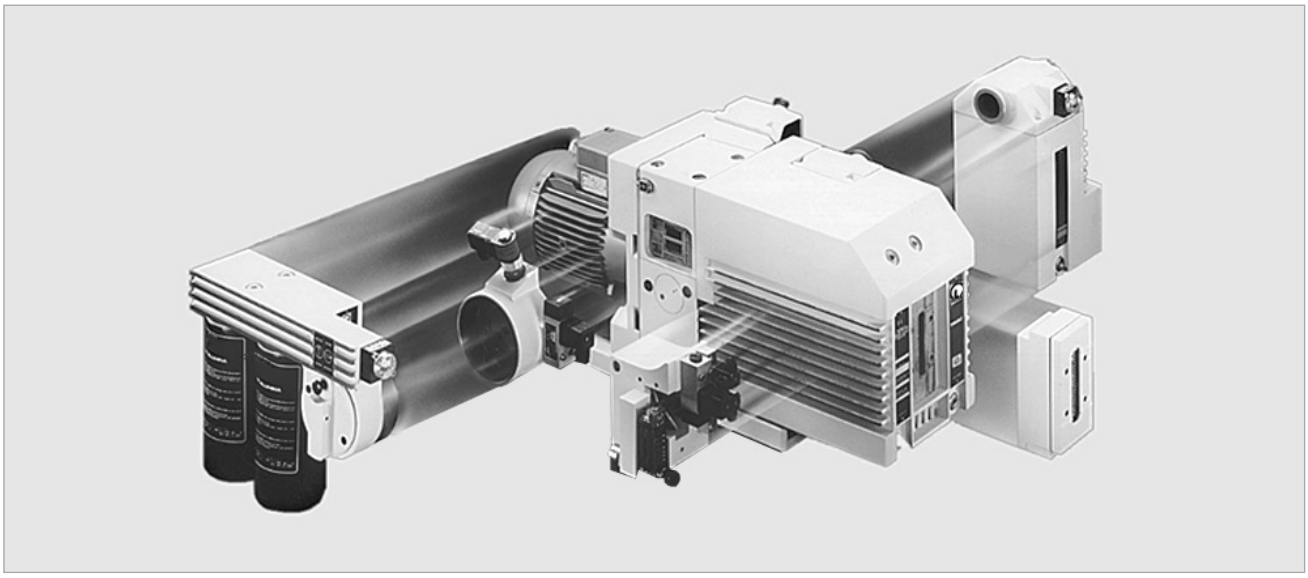

TRIVAC System

The TRIVAC BCS pumps are oil sealed vacuum pumps operating according to the rotary vane principle. Oil which is injected into the pump chamber is used for sealing, lubrication and cooling purposes.

The pump body is assembled from individual parts without sealing components. The parts are pinned in order to ensure easy disassembly and reassembly of the parts.

The motor is connected to the pumping section via an elastic coupling.

In addition, the TRIVAC BCS is ready for system integration (adaptable to different applications).

Advantages to the User

- Compact design
- Low noise operation with hardly any vibrations
- Built-in oil pump
- Continuous operation even at 1000 mbar (750 Torr)
- Pressure-lubricated sliding bearings
- Anti-suckback valve controlled via the oil pressure, no backstreaming of oil, independent of the operating mode, with or without gas ballast
- Low backstreaming of oil within the pump
- High pumping speed down to ultimate pressure
- Either vertical or horizontal intake and exhaust ports
- All controls as well as the oil sight glass are located on the face side
- Low power consumption
- Produces very little heat
- Exchangeable inner section
- Main flow oil filters may be fitted
- Very long service life
- Modular system
- Service-friendly
- Built-in temperature switch for temperature monitoring
- Corrosion protected – the use of yellow metals has been avoided; only grey cast iron, surface treated aluminium, steel and stainless steel is used
- Double shaft seal

Typical Applications

- In all areas of vacuum engineering
- Pumping of corrosive or aggressive media
- Production of semiconductors and in the area of chemistry
- Research and production
- Generation of rough and medium vacuum
- Backing pump in pump sets, i.e. in connection with Roots, diffusion, turbo or cryopumps

Supplied Equipment

- Small flanges
- Centering, sealing and clamping rings
- The intake port includes a dirt trap

BCS pumps are supplied with a filling of standard oil LEYBONOL LVO 100.

All pumps are subjected to a vacuum test before delivery!

TRIVAC SYSTEM

The TRIVAC BCS and its accessories

- CFS, chemical filter with safety isolation valve
- ARS, exhaust filter with lubricant return
- IGS, inert gas system
- LSS, limit switch system

make up the TRIVAC SYSTEM.

TRIVAC BCS-PFPE

In many applications the use of synthetic lubricants like perfluoro-polyether (PFPE) offers superior characteristics compared to mineral oils.

Advantages of perfluoropolyether (PFPE) LEYBONOL LVO 400:

- Practically inert against all chemical and oxidizing influences
- No polymerization under the influence of high energy radiation
- In part significantly increased oil change intervals
- Thermally highly stable. Thermal decomposition will only occur at temperatures over 290 °C (554 °F)

BCS-PFPE pumps have been especially prepared for operation with LEYBONOL LVO 400 and are supplied **without** the oil filling.
We recommend using our operating fluid LEYBONOL LVO 400 and always to install a chemical oil filter CF or CFS.

TRIVAC D 16 BCS to D 65 BCS

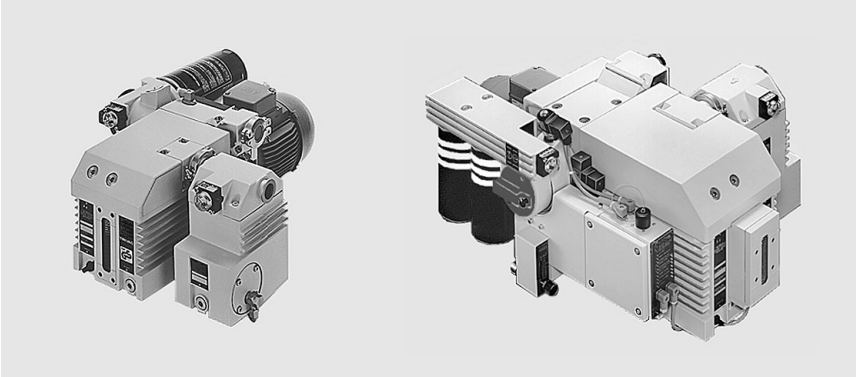

TRIVAC D 25 BCS with ARS and CFS (left)
and TRIVAC D 65 BCS with CFS, ARS, IGS, LSS – TRIVAC SYSTEM (right)

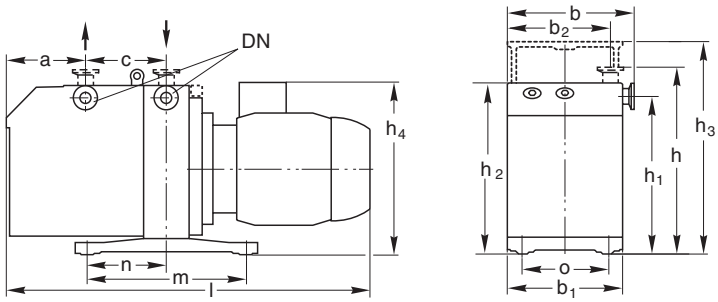

Type	DN		a	b	b_1	b_2	c	h	h_1	h_2	h_3	h_4 [1]	l [1]	m	n	o
D 16 BCS (Part No. 113 68)	25 KF	mm	82	186	172	151	135	262	227	248	298	260	508	280	140	132
		in.	3.23	7.32	6.77	5.94	5.32	10.31	8.94	9.76	11.73	10.24	20.00	11.02	5.51	5.20
D 25 BCS (Part No. 113 78)	25 KF	mm	144	186	172	151	135	262	227	248	298	260	570	280	140	132
		in.	5.67	7.32	6.77	5.94	5.32	10.31	8.94	9.76	11.73	10.24	22.44	11.02	5.51	5.20
D 40 BCS (Part No. 113 88)	40 KF	mm	135	255	235	206	166	361	308	341	–	320	720	382	191	190
		in.	5.32	10.04	9.25	8.11	6.54	14.21	12.13	13.43	–	12.60	28.35	15.04	7.52	7.48
D 65 BCS (Part No. 113 98)	40 KF	mm	213	255	235	206	166	361	308	341	–	320	797	382	191	190
		in.	8.39	10.04	9.25	8.11	6.54	14.21	12.13	13.43	–	12.60	31.38	15.04	7.52	7.48

[1] For dimensions h_4 and l for further part numbers, see paragraph “Motor Dependent Data for the TRIVAC B, BCS and BCS-PFPE”

Dimensional drawing for the TRIVAC D 16 to D 65 BCS

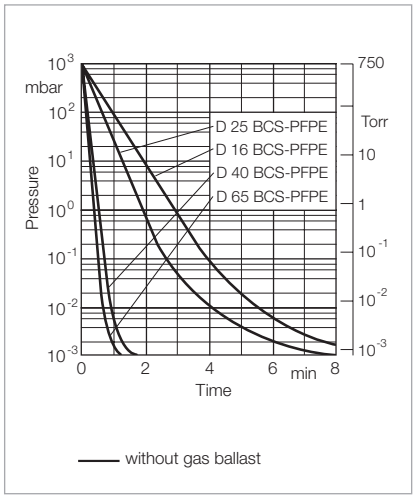

Pump-down characteristics of a 100 l vessel at 50 Hz

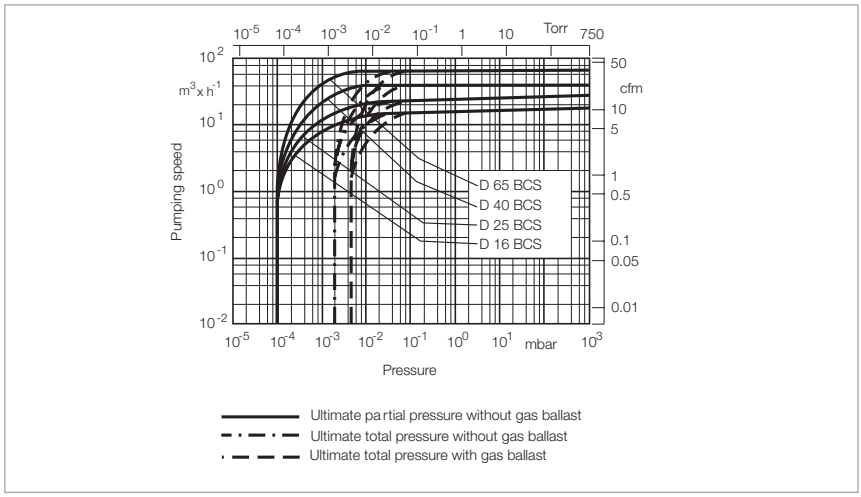

Pumping speed characteristics at 50 Hz (60 Hz curves at the end of the chapter)

Technical Data		TRIVAC D 16 BCS two-stage		TRIVAC D 25 BCS two-stage	
		50 Hz	60 Hz	50 Hz	60 Hz
Nominal pumping speed [1]	m^3/h (cfm)	18.9 (11.1)	22.7 (13.4)	29.5 (17.4)	35.4 (20.9)
Pumping speed [1]	m^3/h (cfm)	16.5 (9.7)	19.8 (11.7)	25.7 (15.1)	30.8 (18.2)
Ultimate partial pressure without gas ballast [1]	mbar (Torr)	10^{-4} (0.75 x 10^{-4})	10^{-4} (0.75 x 10^{-4})	10^{-4} (0.75 x 10^{-4})	10^{-4} (0.75 x 10^{-4})
Ultimate total pressure without gas ballast [1]	mbar (Torr)	< 2.5 x 10^{-3} (< 1.9 x 10^{-3})	< 2.5 x 10^{-3} (< 1.9 x 10^{-3})	< 2.5 x 10^{-3} (< 1.9 x 10^{-3})	< 2.5 x 10^{-3} (< 1.9 x 10^{-3})
Ultimate total pressure with gas ballast [1]	mbar (Torr)	< 5 x 10^{-3} (< 3.8 x 10^{-3})	< 5 x 10^{-3} (< 3.8 x 10^{-3})	< 5 x 10^{-3} (< 3.8 x 10^{-3})	< 5 x 10^{-3} (< 3.8 x 10^{-3})
Water vapor tolerance [1]	mbar (Torr)	25 (18.8)	25 (18.8)	25 (18.8)	25 (18.8)
Water vapor capacity	g/h (lbs/h)	305 (0.672)	370 (0.816)	476 (1.049)	570 (1.257)
Oil filling, min. / max.	l (qt)	0.45 / 1.2 (0.5 / 1.1)	0.45 / 1.2 (0.5 / 1.1)	0.6 / 1.4 (0.6 / 1.5)	0.6 / 1.4 (0.6 / 1.5)
Noise level [2] to DIN 45 635, without / with gas ballast	dB(A)	54 / 56	54 / 56	54 / 56	54 / 56
Admissible ambient temperature	°C (°F)	+12 to +40 (+54 to +104)	+12 to +40 (+54 to +104)	+12 to +40 (+54 to +104)	+12 to +40 (+54 to +104)
Motor rating [2]	W (HP)	750 (1.0)	750 (1.0)	750 (1.0)	750 (1.0)
Nominal speed	rpm	1425	1730	1425	1730
Type of protection	IP	[3]	[3]	[3]	[3]
Weight [2]	kg (lbs)	28 (61.7)	28 (61.7)	32.3 (71.2)	32.3 (71.2)
Connections, Intake and Exhaust	DN	25 KF	25 KF	25 KF	25 KF

[1] To DIN 28 400 and following numbers
[2] Motor rating and noise levels for the pumps with AC motor 50 Hz.
Any data that deviate from the above for pumps with other motors, and other motor-dependent data are given in chapter “Products”, paragraph “Motor Dependent Data for the TRIVAC B, BCS and BCS-PFPE”.
[3] See paragraph “Motor Dependent Data for the TRIVAC B, BCS and BCS-PFPE”.

Technical Data

		TRIVAC D 40 BCS two-stage		TRIVAC D 65 BCS two-stage	
		50 Hz	60 Hz	50 Hz	60 Hz
Nominal pumping speed [1]	m^3/h (cfm)	46 (27)	55 (32.5)	75 (44)	90 (53)
Pumping speed [1]	m^3/h (cfm)	40 (24)	48 (28)	65 (38)	78 (46)
Ultimate partial pressure without gas ballast [1]	mbar (Torr)	10^{-4} (0.75 x 10^{-4})	10^{-4} (0.75 x 10^{-4})	10^{-4} (0.75 x 10^{-4})	10^{-4} (0.75 x 10^{-4})
Ultimate total pressure without gas ballast [1]	mbar (Torr)	< 2 x 10^{-3} (< 1.5 x 10^{-3})	< 2 x 10^{-3} (< 1.5 x 10^{-3})	< 2 x 10^{-3} (< 1.5 x 10^{-3})	< 2 x 10^{-3} (< 1.5 x 10^{-3})
Ultimate total pressure with gas ballast [1]	mbar (Torr)	< 5 x 10^{-3} (< 3.8 x 10^{-3})	< 5 x 10^{-3} (< 3.8 x 10^{-3})	< 5 x 10^{-3} (< 3.8 x 10^{-3})	< 5 x 10^{-3} (< 3.8 x 10^{-3})
Water vapor tolerance [1]	mbar (Torr)	40 (30)	40 (30)	40 (30)	40 (30)
Water vapor capacity	g/h (lbs/h)	1184 (2.610)	1420 (3.131)	1925 (4.244)	2310 (5.093)
Oil filling, min. / max.	l (qt)	1.7 / 2.6 (1.8 / 2.7)	1.7 / 2.6 (1.8 / 2.7)	2.0 / 3.3 (2.1 / 3.5)	2.0 / 3.3 (2.1 / 3.5)
Noise level [2] to DIN 45 635, without / with gas ballast	dB(A)	57 / 59	57 / 59	57 / 59	57 / 59
Admissible ambient temperature	°C (°F)	+12 to +40 (+54 to +104)	+12 to +40 (+54 to +104)	+12 to +40 (+54 to +104)	+12 to +40 (+54 to +104)
Motor rating [2]	W (HP)	2200 (3.0)	2200 (3.0)	2200 (3.0)	2200 (3.0)
Nominal speed	rpm	1460	1760	1460	1760
Type of protection	IP	[3]	[3]	[3]	[3]
Weight [2]	kg (lbs)	75.3 (166)	75.3 (166)	84.5 (186.3)	84.5 (186.3)
Connections, Intake and Exhaust	DN	40 KF	40 KF	40 KF	40 KF

[1] To DIN 28 400 and following numbers

[2] Motor rating and noise levels for the pumps with AC motor 50 Hz.
Any data that deviate from the above for pumps with other motors, and other motor-dependent data are given in chapter “Products”, paragraph “Motor Dependent Data for the TRIVAC B, BCS and BCS-PFPE”.

[3] See paragraph “Motor Dependent Data for the TRIVAC B, BCS and BCS-PFPE”.

Ordering Information

	TRIVAC D 16 BCS two-stage	TRIVAC D 25 BCS two-stage	TRIVAC D 40 BCS two-stage	TRIVAC D 65 BCS two-stage
	Part No.	**Part No.**	**Part No.**	**Part No.**
TRIVAC B with 3-phase motor 200 – 240 V (200 V IE3) / 380 – 400 V (380 – 400 V IE 3), 50 Hz / 200 – 240 (208 – 240 V IE3) / 380 – 480 V (416 – 480 V IE3), 60 Hz	**113 68**	**113 78**	**-**	**-**
200 – 240 V (200 V IE3) / 380 – 400 V (380 – 400 V IE 3), 50 Hz / 200 – 240 (208 – 240 V IE3) / 400 – 480 V (416 – 480 V IE3), 60 Hz	**-**	**-**	**113 88**	**113 98**
180 – 220 V (200 V IE3 Japan) / 311 – 380 V (346 V IE3 Japan), 50 Hz / 200 – 240 V (220 V IE3 Japan) / 342 – 418 V (380 V IE3 Japan), 60 Hz	**-**	**-**	**-**	**113 98J**
Accessories				
Roots pump adaptor	**–**	**–**	**168 30**	**168 30**
Exhaust filter with lubricant return ARS 16-25 ARS 40-65	 **189 56** **–**	 **189 56** **–**	 **–** **189 57**	 **–** **189 57**
Condensate separator AK 16-25 AK 40-65	 **188 11** **–**	 **188 11** **–**	 **–** **188 16**	 **–** **188 16**
Chemical filter with safety blocking valve CFS 16-25 CFS 40-65	 **101 76** **–**	 **101 76** **–**	 **–** **101 77**	 **–** **101 77**
Inert gas system IGS 16-25 IGS 40-65	 **161 76** **–**	 **161 76** **–**	 **–** **161 68V**	 **–** **161 68V**
Limit switch system LSS 16-25 LSS 40-65	 **161 06** **–**	 **161 06** **–**	 **–** **161 07**	 **–** **161 07**
Spare Parts				
Inner body	**E 200 39 762**	**E 200 39 764**	**E 200 39 758**	**E 200 39 760**
Major maintenance kit for LVO 100 (without oil)	**EK110002646**	**EK110002647**	**EK110002641**	**EK110002642**
Minor maintenance kit for LVO 100 (without oil)	**EK110002649**	**EK110002648**	**EK110002624**	**EK110002624**
Shaft sealing replacement kit	**EK110002650**	**EK110002650**	**EK110002643**	**EK110002643**
Seal kit	**197 31**	**197 31**	**197 32**	**197 32**

For further accessories see section “Accessories for TRIVAC E, B and BCS”.

TRIVAC D 16 BCS-PFPE to D 65 BCS-PFPE

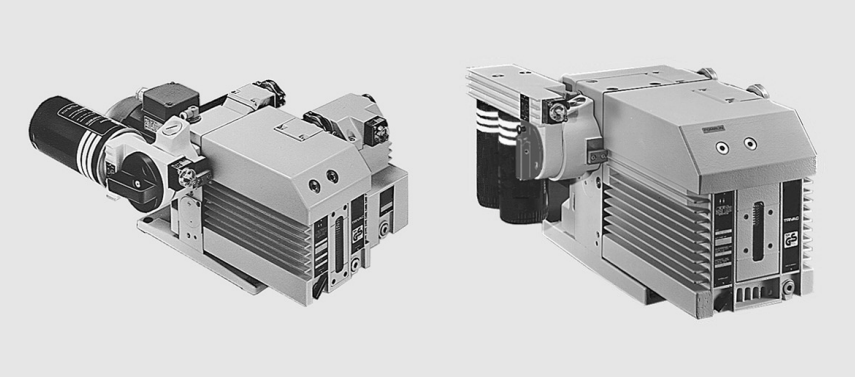

TRIVAC D 25 BCS-PFPE with CFS 16-25 and ARS 16-25 (left) and
TRIVAC D 65 BCS-PFPE with CFS 40-65 (right)

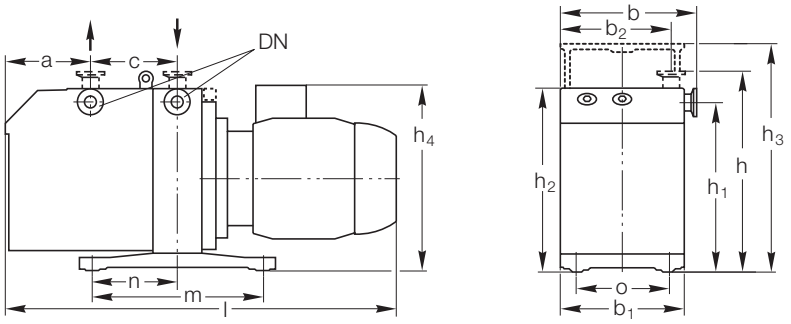

Type	DN		a	b	b_1	b_2	c	h	h_1	h_2	h_3	h_4	l	m	n	o
D 16 BCS-PFPE (Part No. 113 69)	25 KF	mm	82	190	175	150	135	263	226	250	298	260	508	280	140	132
		in.	3.23	7.48	6.89	5.91	5.32	10.35	8.90	9.84	11.73	10.24	20.00	11.02	5.51	5.20
D 25 BCS-PFPE (Part No. 113 79)	25 KF	mm	142	190	175	150	135	263	226	250	298	260	570	280	140	132
		in.	5.59	7.48	6.89	5.91	5.32	10.35	8.90	9.84	11.73	10.24	22.44	11.02	5.51	5.20
D 40 BCS-PFPE (Part No. 113 89)	40 KF	mm	135	285	264	206	166	355	308	336	–	317	719	382	191	190
		in.	5.32	11.22	10.39	8.11	6.54	13.98	12.13	13.23	–	12.48	28.31	15.04	7.52	7.48
D 65 BCS-PFPE (Part No. 113 99)	40 KF	mm	213	285	264	206	166	355	308	336	–	317	794	382	191	190
		in.	8.39	11.22	10.39	8.11	6.54	13.98	12.13	13.23	–	12.28	31.26	15.04	7.52	7.48

[1] For dimensions h_4 and l for further part numbers, see paragraph “Motor Dependent Data for the TRIVAC B, BCS and BCS-PFPE”

Dimensional drawing for the TRIVAC D 16 to D 65 BCS-PFPE

Technical Data

		TRIVAC D 16 BCS-PFPE two-stage		TRIVAC D 25 BCS-PFPE two-stage	
		50 Hz	60 Hz	50 Hz	60 Hz
Nominal pumping speed [1]	m^3/h (cfm)	18.9 (11.1)	22.7 (13.4)	29.5 (17.4)	35.4 (20.9)
Pumping speed [1]	m^3/h (cfm)	16.5 (9.7)	19.8 (11.7)	25.7 (15.1)	30.8 (18.2)
Ultimate partial pressure without gas ballast [1]	mbar (Torr)	$< 8 \times 10^{-4}$ ($< 6 \times 10^{-4}$)	$< 8 \times 10^{-4}$ ($< 6 \times 10^{-4}$)	$< 8 \times 10^{-4}$ ($< 6 \times 10^{-4}$)	$< 8 \times 10^{-4}$ ($< 6 \times 10^{-4}$)
Ultimate total pressure with gas ballast [1]	mbar (Torr)	$< 5 \times 10^{-3}$ ($< 3.8 \times 10^{-3}$)	$< 5 \times 10^{-3}$ ($< 3.8 \times 10^{-3}$)	$< 5 \times 10^{-3}$ ($< 3.8 \times 10^{-3}$)	$< 5 \times 10^{-3}$ ($< 3.8 \times 10^{-3}$)
Lubricant filling					
min. / max.	l (qt)	0.45 / 1.0 (0.5 / 1.1)	0.45 / 1.0 (0.5 / 1.1)	0.6 / 1.4 (0.6 / 1.5)	0.6 / 1.4 (0.6 / 1.5)
upon delivery	l (qt)	0.2 (0.2)	0.2 (0.2)	0.4 (0.4)	0.4 (0.4)
Noise level [2] to DIN 45 635, without / with gas ballast	dB(A)	54 / 56	54 / 56	54 / 56	54 / 56
Admissible ambient temperature	°C (°F)	+12 to +40 (+54 to +104)	+12 to +40 (+54 to +104)	+12 to +40 (+54 to +104)	+12 to +40 (+54 to +104)
Motor rating [2]	W (HP)	750 (1.0)	750 (1.0)	750 (1.0)	750 (1.0)
Nominal speed	rpm	1425	1730	1425	1730
Type of protection	IP	[3]	[3]	[3]	[3]
Weight [2]	kg (lbs)	29.3 (64.5)	29.3 (64.5)	33.8 (74.4)	33.8 (74.4)
Connections, Intake and Exhaust	DN	25 KF	25 KF	25 KF	25 KF

[1] To DIN 28 400 and following numbers
[2] Motor rating and noise levels for the pumps with AC motor 50 Hz.
Any data that deviate from the above for pumps with other motors, and other motor-dependent data are given in chapter “Products”, paragraph “Motor Dependent Data for the TRIVAC B, BCS and BCS-PFPE”.
[3] See paragraph “Motor Dependent Data for the TRIVAC B, BCS and BCS-PFPE”.

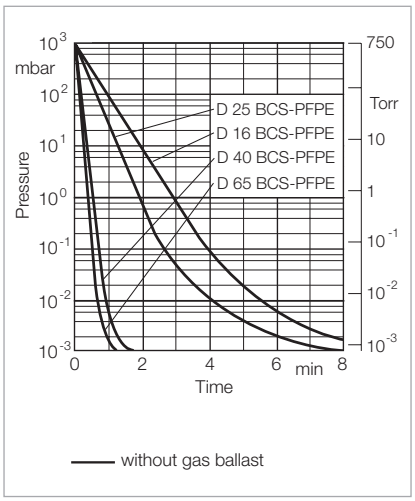

Pump-down characteristics of a 100 l vessel at 50 Hz

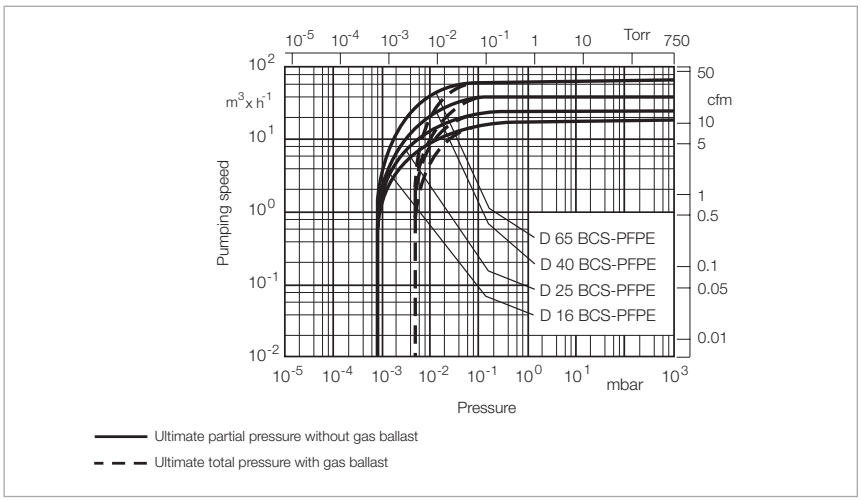

Pumping speed characteristics at 50 Hz (60 Hz curves at the end of the chapter)

Technical Data		TRIVAC D 40 BCS-PFPE two-stage		TRIVAC D 65 BCS-PFPE two-stage	
		50 Hz	60 Hz	50 Hz	60 Hz
Nominal pumping speed [1]	m^3/h (cfm)	46 (27)	55 (32.5)	75 (44)	90 (53)
Pumping speed [1]	m^3/h (cfm)	40 (24)	48 (28)	65 (38)	78 (46)
Ultimate partial pressure without gas ballast [1]	mbar (Torr)	$< 8 \times 10^{-4}$ ($< 6 \times 10^{-4}$)	$< 8 \times 10^{-4}$ ($< 6 \times 10^{-4}$)	$< 8 \times 10^{-4}$ ($< 6 \times 10^{-4}$)	$< 8 \times 10^{-4}$ ($< 6 \times 10^{-4}$)
Ultimate total pressure with gas ballast [1]	mbar (Torr)	$< 5 \times 10^{-3}$ ($< 3.8 \times 10^{-3}$)	$< 5 \times 10^{-3}$ ($< 3.8 \times 10^{-3}$)	$< 5 \times 10^{-3}$ ($< 3.8 \times 10^{-3}$)	$< 5 \times 10^{-3}$ ($< 3.8 \times 10^{-3}$)
Lubricant filling					
min. / max.	l (qt)	1.7 / 2.6 (1.8 / 2.7)	1.7 / 2.6 (1.8 / 2.7)	2.0 / 3.3 (2.1 / 3.5)	2.0 / 3.3 (2.1 / 3.5)
upon delivery	l (qt)	0.6 (0.6)	0.6 (0.6)	0.75 (0.8)	0.75 (0.8)
Noise level [2] to DIN 45 635, without / with gas ballast	dB(A)	57 / 59	57 / 59	57 / 59	57 / 59
Admissible ambient temperature	°C (°F)	+12 to +40 (+54 to +104)	+12 to +40 (+54 to +104)	+12 to +40 (+54 to +104)	+12 to +40 (+54 to +104)
Motor rating [2]	W (HP)	2200 (3.0)	2200 (3.0)	2200 (3.0)	2200 (3.0)
Nominal speed	rpm	1460	1760	1460	1760
Type of protection	IP	[3]	[3]	[3]	[3]
Weight [2]	kg (lbs)	77.9 (171.8)	77.9 (171.8)	87.9 (193.7)	87.9 (193.7)
Connections, Intake and Exhaust	DN	40 KF	40 KF	40 KF	40 KF

[1] To DIN 28 400 and following numbers
[2] Motor rating and noise levels for the pumps with AC motor 50 Hz.
Any data that deviate from the above for pumps with other motors, and other motor-dependent data are given in chapter “Products”, paragraph “Motor Dependent Data for the TRIVAC B, BCS and BCS-PFPE”.
[3] See paragraph “Motor Dependent Data for the TRIVAC B, BCS and BCS-PFPE”.

Ordering Information	TRIVAC D 16 BCS-PFPE two-stage	TRIVAC D 25 BCS-PFPE two-stage	TRIVAC D 40 BCS-PFPE two-stage	TRIVAC D 65 BCS-PFPE two-stage
	Part No.	Part No.	Part No.	Part No.
TRIVAC BCS-PFPE with 3-phase motor 200 – 240 V (200 V IE3) / 380 – 400 V (380 – 400 V IE3), 50 Hz / 200 – 240 (208 – 240 V IE3) / 380 – 480 V (416 – 480 V IE3), 60 Hz	113 69	113 79	-	-
200 – 240 V (200 V IE3) / 380 – 400 V (380 – 400 V IE 3), 50 Hz / 200 – 240 (208 – 240 V IE3) / 400 – 480 V (416 – 480 V IE3), 60 Hz	-	-	113 89	113 99
Accessories				
Roots pump adaptor	–	–	168 30	168 30
Exhaust filter with lubricant return ARS 16-25 ARS 40-65	 189 56 –	 189 56 –	 – 189 57	 – 189 57
Condensate trap AK 16-25 AK 40-65	 188 11 –	 188 11 –	 – 188 16	 – 188 16
Chemical filter with safety isolation valve CFS 16-25 CFS 40-65	 101 76 –	 101 76 –	 – 101 77	 – 101 77
Inert gas system IGS 16-25 IGS 40-65	 161 76 –	 161 76 –	 – 161 68V	 – 161 68V
Limit switch system LSS 16-25 LSS 40-65	 161 06 –	 161 06 –	 – 161 07	 – 161 07
Spare Parts				
Major maintenance kit, LVO 400 (without oil)	EK110002644	EK110002645	EK110002637	EK110002638
Shaft sealing replacement kit	EK110002650	EK110002650	EK110002643	EK110002643
Seal kit	197 41	197 41	197 42	197 42

For further accessories see section “Accessories for TRIVAC E, B and BCS”.

Only available for purchase in North and South America

Ordering Information	TRIVAC D 16 BCS-PFPE two-stage	TRIVAC D 25 BCS-PFPE two-stage
	Part No.	Part No.
TRIVAC BCS-PFPE with 1-phase motor 200 – 230 V, 50/60 Hz, NEMA plug	–	913 79-2

Motor Dependent Data for the TRIVAC B, BCS and BCS-PFPE

Pump type	D 4 / 8 B	D 4 / 8 B	D 4 / 8 B	D 4 / 8 B
Part No. of the pump	140 081, 140 082	112 45, 112 55	112 46, 112 56 112 5631, 140 246	140 140, 140 150
Motor part number	100002292	6507733	6508538	20010406
Size	80	71	71	71L
Protection class	IP 54	IP 55	IP 55	IP 55
Operating mode in acc. w. IEC 34 / NEMA	S1	S1	S1	S1
Insulation class	F	F	F	F
Phases	1~	1~	3~	3~
Efficiency class	–	–	–	–
Number of poles	4	4	4	4
Nominal output power at 50 Hz at 60 Hz	 570 W 660 W	 370 W –	 370 W 440 W	 370 W –
Nominal input frequency	50 Hz / 60 Hz	50 Hz	50 Hz / 60 Hz	50 Hz
Tolerances of voltage range	±10 %	±5 %	±10 %	±5 %
Nominal voltage range and nominal current at 50 Hz	100 –115 V / 7.7 A 210 – 230 V / 4.0 A	230 V / 3.0 A –	200 – 240 V / 2.3 A 380 – 400 V / 1.07 A	219 – 242 V / 1.84 A 380 – 420 V / 1.06 A
at 60 Hz	100 – 115 V / 5.6 A 210 – 230 V / 2.8 A	– –	200 – 240 V / 2.15 A 380 – 480 V / 1.07 A	– –
Nominal speed 50 Hz rpm 60 Hz rpm	 1420 1690	 1410 –	 1430 1735	 1390 –
Maximum operating altitude above sea level	1000 m	1000 m	1000 m	1000 m
Max. ambient temperature during operation °C (°F)	40 (104)	40 (104)	40 (104)	40 (104)
Terminal board / plug	Multi-pin plug at junction box, mains cord E20081091 (1.8 m) with Schuko plug CEE 7/7 (included in delivery), mains cord E20081097 (1.8 m) with UK plug BS 1363 (optional), mains cord E20081099 (1.8 m) with CH plug SEV 1011 (optional), mains cord E20081141 (1.8 m) with US plug NEMA 6-15P (optional)	Mains cord (2 m) with Schuko plug CEE	9 pins	6 pins
Certifications	CE UL	CE	CE RoHS ENERGY c UL us	CE Ex II 2 G Ex e II T3
Shaft dimension ∅d / l mm (in.)	14 / 30 (0.55 / 1.18)	14 / 30 (0.55 / 1.18)	14 / 30 (0.55 / 1.18)	14 / 30 (0.55 / 1.18)
Size of flange A/B mm (in.)	140 / 95 (5.51 / 3.74)	140 / 95 (5.51 / 3.74)	140 / 95 (5.51 / 3.74)	140 / 95 (5.51 / 3.74)
Length of the pump mm (in.)	458 (18.03) (D 4 B) 482 (18.98) (D 8 B)	442 (18.11) (D 4 B) 467 (19.06) (D 8 B)	458 (18.62) (D 4 B) 482 (18.98) (D 8 B)	438 (17.24) (D 4 B) 462 (18.19) (D 8 B)
Height up to top edge of junction box h_4 mm (in.)	254 (10.0)	243 (9.57)	247 (9.72)	241 (9.49)

Only available for purchase in North and South America

Pump type	D 8 B
Part No. of the pump	898 974
Motor part number	72260196
Size	56C
Protection class	TEFC
Operating mode in acc. w. IEC 34 / NEMA	continuous
Insulation class	B
Phases	1~
Efficiency class	–
Number of poles	4
Nominal output power at 50 Hz at 60 Hz	 240 W 370 W
Nominal input frequency	50 Hz / 60 Hz
Tolerances of voltage range	±5 %
Nominal voltage range and nominal current at 50 Hz	 110 V / 9.6 A 220 V / 4.8 A
at 60 Hz	115 V / 8.8 A 208-230 V / 4.5 A
Nominal speed 50 Hz rpm 60 Hz rpm	 1425 1725
Maximum operating altitude above sea level	1000 m
Max. ambient temperature during operation °C (°F)	 40 (104)
Terminal board / plug	12 pin plug at the motor, mains cord (1.8 m) E72127874 with US plug NEMA 5-15P (115 V) (optional)
Certifications	CE CSA RoHS UL
Shaft dimension ⌀d / l mm (in.)	15.87 / 52.32 (0.63 / 2.06)
Size of flange A/B mm (in.)	114.3 (4.5)
Length of the pump mm (in.)	557 (21.93) (D 8 B)
Height up to top edge of junction box h_4 mm (in.)	287 (11.30)

Pump type	D 16 / 25 B D 16 / 25 BCS D 16 / 25 BCS-PFPE D 16 / 25 B-DOT	D 16 / 25 B	D 16 / 25 B (3i/3o)	D 16 B-Ex
Part No. of the pump	112 66, 112 76, 113 33 914 63-1 112 68, 112 78 112 69, 112 79 114 06, 114 10, 112 76 18 113 68, 113 78, 113 69, 113 79	112 66J, 112 76J, 113 33J, 113 98J	140 160, 140 170	140 091, 140 092
Motor part number	6506939	6520730	20010409	100002330
Size	80	80Z	80L	80L
Protection class	IP 55	IP 55	IP 55	IP 55
Operating mode in acc. w. IEC 34 / NEMA	S1	S1	S1	S1
Insulation class	F	F	F	F
Phases	3~	3~	3~	3~
Efficiency class	IE3	IE3 Japan	–	–
Number of poles	4	4	4	4
Nominal output power at 50 Hz at 60 Hz	 750 W 750 W	 750 W 750 W	 750 W –	 750 W –
Nominal input frequency	50 Hz / 60 Hz	50 Hz / 60 Hz	50 Hz	50 Hz
Tolerances of voltage range	±10 %	±10 %	±5 %	±5 %
Nominal voltage range and nominal current at 50 Hz	200 – 240 V / 3.8 A 200 V / 3.8 A (IE3) 380 – 400 V / 1.9 A 380 – 400 V / 1.9 A (IE3)	180 – 220 V / 3.6 A 200 V / 3.6 A (IE3) 311 – 380 V / 2.1 A 346 V / 1.9 A (IE3)	219 – 242 V / 3.35 A – 380 – 420 / 1.94 A –	219 – 242 V V / 3.4 A – 380 – 420 / 1.95 A –
at 60 Hz	200 – 240 V / 3.4 A 208 – 240 V / 3.4 A (IE3) 380 – 480 V / 1.9 A 416 – 480 V / 1.7 A (IE3)	200 – 240 V / 3.4 A 220 V / 3,1 A (IE3) 342 – 418 V / 1.9 A 380 V / 1.8 A (IE3)	– – – –	– – – –
Nominal speed 50 Hz rpm 60 Hz rpm	 1425 1730	 1440 1745	 1380 –	 1405 –
Maximum operating altitude above sea level	1000 m	1000 m	1000 m	1000 m
Max. ambient temperature during operation °C (°F)	40 (104)	40 (104)	40 (104)	40 (104)
Terminal board / plug	9 pins	9 pins	6 pins	6 pins
Certifications	CE RoHS ENERGY c UL us Energy Verified	CE RoHS	CE Ex II 2 G Ex e II T3	CE Ex II 2 G Ex e II T4
Shaft dimension ∅d / l mm (in.)	19 / 40 (0.75 / 1.58)	19 / 40 (0.75 / 1.58)	19 / 40 (0.75 / 1.58)	19 / 40 (0.75 / 1.58)
Size of flange A/B mm (in.)	160 / 110 (6.30 / 4.33)	160 / 110 (6.30 / 4.33)	160 / 110 (6.30 / 4.33)	160 / 110 (6.30 / 4.33)
Length of the pump mm (in.)	509 (20.4) (D 16 B) 570 (22.44) (D 25 B)	509 (20.4) (D 16 B) 570 (22.44) (D 25 B)	510 (20.08) (D 16 B) 572 (22.52) (D 25 B)	583 (22.95) (D 16 B) –
Height up to top edge of junction box h_4 mm (in.)	260 (10.24)	260 (10.24)	268 (10.55)	268 (10.55)

Pump type	D 16 / 25 B	D 16 / 25 B	D 16 B
Part No. of the pump	112 65, 112 75	113 25, 113 35	898 698
Motor part number	38066003	110001212	72260187
Size	90	90	56C
Protection class	IP 44	IP 54	IP44
Operating mode in acc. w. IEC 34 / NEMA	S1	H	continuous
Insulation class	F	F	F
Phases	1~	1~	1~
Efficiency class	–	–	–
Number of poles	4	4	4
Nominal output power at 50 Hz at 60 Hz	 750 W 750 W	 750 W 750 W	 750 W 750 W
Nominal input frequency	50 Hz / 60 Hz	50 Hz / 60 Hz	50 Hz / 60 Hz
Tolerances of voltage range	±5 %	±5 %	±5 %
Nominal voltage range and nominal current at 50 Hz	218 – 242 V / 5.0 – 5.6 A –	208 – 252 V / 5.7 A –	110 V / 15.0 A 220 V / 7.5 A
at 60 Hz	218 – 242 V / 5.7 – 5.6 A –	208 – 252 V / 4.9 A –	115 V / 12.4 A 208 – 230 V / 6.3 – 6.2 A
Nominal speed 50 Hz rpm 60 Hz rpm	 1460 1750	 1420 1680	 1500 1800
Maximum operating altitude above sea level	1000 m	1000 m	1000 m
Max. ambient temperature during operation °C (°F)	40 (104)	40 (104)	40 (104)
Terminal board / plug	Mains cord (2 m) with Schuko plug CEE	Multi-pin plug at junction box, mains cord E20081091 (1.8 m) with Schuko plug CEE 7/7 (Included in delivery), mains cord E20081097 (1.8 m) with UK plug BS 1363 (optional), mains cord E20081099 (1.8 m) with CH plug SEV 1011 (optional), mains cord E20081141 (1.8 m) with US plug NEMA 6-15P (230 V) (optional)	Multi-pin plug at junction box, mains cord (1.8 m) E72127877 with US plug NEMA 5-15P (115 V) (included in delivery), mains cord (1.8 m) E72127878 with US plug NEMA 6-15P (230 V) (included in delivery), mains cord (1.8 m) E72127875 with US Plug NEMA 6-15P (115 V) (optional), mains cord (1.8 m) E72127874 with US Plug NEMA FEM (230 V) (optional),
Certifications	CE	CE	CE
Shaft dimension ⌀ d / l mm (in.)	19 / 40 (0.75 / 1.58)	19 / 40 (0.75 / 1.58)	15.87 / 53.32 (0.63 / 2.06)
Size of flange A/B mm (in.)	160 / 110 (6.30 / 4.33)	160 / 110 (6.30 / 4.33)	114.3 (4.5)
Length of the pump mm (in.)	521 (20.51) (D 16 B) 583 (22.95) (D 25 B)	505 (19.88) (D 16 B) 567 (22.32) (D 25 B)	582 (22.91) (D 16 B) –
Height up to top edge of junction box h_4 mm (in.)	278 (10.95)	279 (10.98)	263 (10.35)

Only available for purchase in North and South America

Pump type	D 16 B	D 16 B
Part No. of the pump	898 208, 912 65-1	912 65-2
Motor part number	72260117	72260005
Size	56C	
Protection class	IP 43	TEFC
Operating mode in acc. w. IEC 34 / NEMA	continuous	
Insulation class	F	B
Phases	1~	1~
Efficiency class	–	–
Number of poles	4	4
Nominal output power at 50 Hz at 60 Hz	 560 W 560 W	 550 W 550 W
Nominal input frequency	50 Hz / 60 Hz	50 Hz / 60 Hz
Tolerances of voltage range	±5 %	±5 %
Nominal voltage range and nominal current at 50 Hz	 115 V / 13.0 A 208 – 230 V / 5.5 – 6.5 A	 208 – 230 V / 5.5 – 6.5 A –
at 60 Hz	115 V / 9.4 A 208 – 230 V / 4.8 – 4.7 A	208 – 230 V / 4.8 – 4.7 A –
Nominal speed 50 Hz rpm 60 Hz rpm	 1425 1725	 1500 1800
Maximum operating altitude above sea level	1000 m	
Max. ambient temperature during operation °C (°F)	40 (104)	
Terminal board / plug	Mains cord (1.8 m) with with US plug NEMA 5-15P (115 V)	Mains cord (1.8 m) with with plug NEMA 6-15P (230 V)
Certifications	CE	
Shaft dimension ⌀d / l mm (in.)	15.87 / 53.32 (0.63 / 2.06)	
Size of flange A/B mm (in.)	114.3 (4.50)	
Length of the pump mm (in.)	562 (22.13) (D 16 B)	538 (21.18) (D 16 B)
Height up to top edge of junction box h_4 mm (in.)	265 (10.43)	247 (9.72)

Only available for purchase in North and South America

Pump type	D 16 B
Part No. of the pump	912 75-2, 913 79-2
Motor part number	72260022
Size	–
Protection class	IP 44
Operating mode in acc. w. IEC 34 / NEMA	continuous
Insulation class	F
Phases	1~
Efficiency class	–
Number of poles	4
Nominal output power at 50 Hz at 60 Hz	 1100 W 1100 W
Nominal input frequency	50 Hz / 60 Hz
Tolerances of voltage range	±5 %
Nominal voltage range and nominal current at 50 Hz	 200 – 230 V / 9.6 – 9.2 A
at 60 Hz	200 – 230 V / 9.0 – 8.0 A –
Nominal speed 50 Hz rpm 60 Hz rpm	 1425 1725
Maximum operating altitude above sea level	1000 m
Max. ambient temperature during operation °C (°F)	40 (104)
Terminal board / plug	Mains cord (1.8 m) with with plug NEMA 6-15P (230 V)
Certifications	CE CSA
Shaft dimension ⌀d / l mm (in.)	15.87 / 53.32 (0.63 / 2.06)
Size of flange A/B mm (in.)	114.3 (4.50)
Length of the pump mm (in.)	662 (26.06) (D 25 B)
Height up to top edge of junction box h_4 mm (in.)	265 (10.43)

Pump type	D 40 / 65 B D 40 / 65 BCS D 40 / 65 BCS-PFPE D 40 B-DOT + D 65 B ^{3}He	D 40 / 65 B	D 40 / 65 B-Ex
Part No. of the pump	112 86, 112 96 113 88, 113 98 113 89, 113 99 112 86 12 / 112 96 46	112 86J, 112 96J, 112 98J	140 180, 140 190
Motor part number	6506961	6520731	20010411
Size	100L	100L	100L
Protection class	IP 55	IP 55	IP 55
Operating mode in acc. w. IEC 34 / NEMA	S1	S1	S1
Insulation class	F	F	F
Phases	3~	3~	3~
Efficiency class	IE3	IE3 Japan	–
Number of poles	4	4	4
Nominal output power at 50 Hz at 60 Hz	 2200 W 2200 W	 2200 W 2200 W	 2600 W –
Nominal input frequency	50 Hz / 60 Hz	50 Hz / 60 Hz	50 Hz
Tolerances of voltage range	10 %	10 %	±5 %
Nominal voltage range and nominal current at 50 Hz	 200 – 240 V / 9.0 A 200 V / 9.0 A (IE3) 380 – 400 V / 4.5 A 380 – 400 V / 4.5 A (IE3)	 180 – 220 V / 9.7 A 200 V / 9.7 A (IE3) 311 – 380 V / 5.6 A 346 V / 5.6 A (IE3)	 219 – 242 V / 10.1 A – 380 – 420 V / 5.8 A –
at 60 Hz	 200 – 240 V / 8.8 A 208 – 240 V / 7.8 A (IE3) 400 – 480 V / 4.4 A 416 – 480 V / 3.9 A (IE3)	 200 – 240 V / 8.8 A 220 V / 8.5 A (IE3) 342 – 418 V / 4.9 A 380 V / 4.9 A (IE3)	 – – – –
Nominal speed 50 Hz rpm 60 Hz rpm	 1460 1760	 1460 1760	 1420 –
Maximum operating altitude above sea level	1000 m	1000 m	1000 m
Max. ambient temperature during operation °C (°F)	40 (104)	40 (104)	40 (104)
Terminal board / plug	9 pins	9 pins	6 pins
Certifications	CE RoHS ENERGY c US UL Energy Verified	CE RoHS	CE Ex II 2 G Ex e II T3
Shaft dimension ∅d / l mm (in.)	28 / 60 (1.10 / 2.36)	28 / 60 (1.10 / 2.36)	28 / 60 (1.10 / 2.36)
Size of flange A/B mm (in.)	160 / 110 (6.30 / 4.33)	160 / 110 (6.30 / 4.33)	160 / 110 (6.30 / 4.33)
Length of the pump mm (in.)	720 (28.35) (D 40 B) 797 (31.38) (D 65 B)	720 (28.35) (D 40 B) 797 (31.38) (D 65 B)	720 (28.35) (D 40 B) 797 (31.38) (D 65 B)
Height up to top edge of junction box h_4 mm (in.)	317 (12.48)	317 (12.48)	327 (12.87)

Notes

Accessories

For TRIVAC E, B and BCS

Exhaust Filters AF 8 to AF 25-S
Condensate Traps AK 8 to AK 25

Exhaust filter (left) and condensate trap (right)

Exhaust-Filter

Oil mists and aerosols are retained in the exhaust filter.

Advantages to the User

- Filtering of the exhaust gas by removal of entrained lubricant particles
- Emptying via drain screw
- Separation efficiency > 99%
- Filter elements (made of glass fiber) are exchangeable

Condensate Trap

Condensate traps prevent the formation of condensate in the pump as well as the backstreaming of fluids.

Advantages to the User

- Can be connected to either the intake or the exhaust side
- Protects against condensate forming from sucked in vapors or gases (intake line)
- Protects against backstreaming liquids (exhaust line)
- Emptying via drain screw

Technical Information

The exhaust filter is not capable of retaining toxic and/or aggressive gases. For such applications we recommend the use of an exhaust gas line (e.g. a gas washer).

Since the material is not resistant to all gases and solvents, a materials compatibility chart is available upon request.

Type		a	b	b_1	d	h	h_1
AF 8 / AK 8	mm	66.4	115	57.5	20	145	15.5
	in.	2.61	4.53	2.26	0.79	5.71	0.61
AF 10 / AK 10	mm	90	140	70	20	200	22
	in.	3.54	5.51	2.76	0.79	7.87	0.87
AF 16-S / AK 16	mm	115	165	82.5	20	210	30
	in.	4.53	6.50	3.25	0.79	8.27	1.18
AF 25-S / AK 25	mm	115	165	82.5	20	250	30
	in.	4.53	6.50	3.25	0.79	9.84	1.18

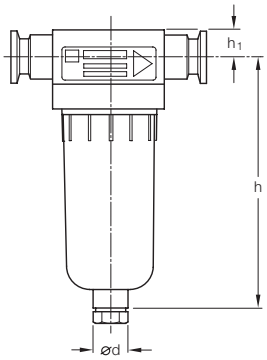

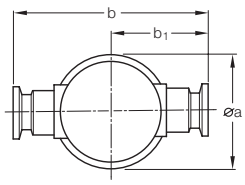

Technical Data

		AF 8	AK 8	AF 10	AK 10	AF 16-S	AK 16	AF 25-S	AK 25
Connection to pump (required accessories for TRIVAC E: elbow)	TRIVAC	D 2,5 E D 4 B D 8 B	D 2,5 E D 4 B D 8 B	D 16 B	D 16 B	D 16 B	D 16 B	D 16 B D 25 B	D 16 B D 25 B
Connection flanges	DN	16 KF	16 KF	25 KF	25 KF	25 KF	25 KF	25 KF	25 KF
Max. filling level (for vertical installation)	ml	60	60	145	145	285	285	285	285
Permissible leak rate	mbar x l/s	$\leq 1 \times 10^{-5}$	$\leq 1 \times 10^{-5}$	$\leq 1 \times 10^{-5}$	$\leq 1 \times 10^{-5}$	$\leq 1 \times 10^{-5}$	$\leq 1 \times 10^{-5}$	$\leq 1 \times 10^{-5}$	$\leq 1 \times 10^{-5}$
Max. continuous temperature	°C (°F)	90 (194)	90 (194)	90 (194)	90 (194)	90 (194)	90 (194)	90 (194)	90 (194)
Material		Polyamide 6	Polyamide 6	Polyamide 6	Polyamide 6	Polyamide 6	Polyamide 6	Polyamide 6	Polyamide 6

Ordering Information

	AF 8	AK 8	AF 10	AK 10	AF 16-S	AK 16	AF 25-S	AK 25
	Part No.	**Part No.**	**Part No.**	**Part No.**	**Part No.**	**Part No.**	**Part No.**	**Part No.**
Exhaust filter	**190 50**	-	**190 51**	-	**190 54**	-	**190 55**	-
Condensate trap	–	**190 60**	–	**190 61**	–	**190 62**	–	**190 63**
Replacement filter element								
FE 8 (pack of 5)	**ES 190 80**	-	-	-	-	-	-	-
FE 10 (pack of 5)	-	-	**ES 190 81**	-	-	-	-	-
FE 16	-	-	-	-	**E 190 84**	-	-	-
FE 25	-	-	-	-	-	-	**E 190 85**	-
Reducer DN 25/16 KF [1] Aluminium (if necessary)	**183 86**	**183 86**	**183 86**	**183 86**	**183 86**	**183 86**	**183 86**	**183 86**
Elbow (1x) Aluminium	**184 36**	**184 36**	**184 37**	**184 37**	**184 37**	**184 37**	**184 37**	**184 37**
Centering ring with O-ring (2x)								
Aluminium / FKM	**182 06**	**182 06**	**182 07**	**182 07**	**182 07**	**182 07**	**182 07**	**182 07**
Stainless steel / FPM	**883 46**	**883 46**	**883 47**	**883 47**	**883 47**	**883 47**	**883 47**	**883 47**
Clamping ring (2x)	**183 41**	**183 41**	**183 42**	**183 42**	**183 42**	**183 42**	**183 42**	**183 42**

[1] When using the reducer, an elbow is required

Exhaust Filters
AF 4-8 to AF 40-65
AF 16-25 DOT and AF 40-65 DOT

AF 4-8 exhaust filter

Exhaust filters retain oil mists and aerosols.

Advantages to the User

- Can be fitted without additional accessories
- Separation efficiency over 99 %
- Exchangeable filter inserts
- Built-in over-pressure relief valve (threshold at about 1.5 bar (7.2 psi, differential))
- Sight glass for checking of the quantity of collected oil
- Resistant against solvents
- Seals for
  AF made of FPM (FKM)
  AF-DOT made of EPDM
- Easy to clean and use
- Retains dirt and cracked products

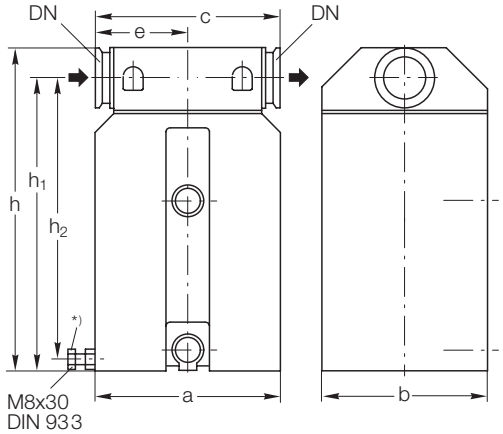

Type	DN		a	b	c	e	h	h_1	h_2
AF 4-8	16 KF	mm	90	90	120	60	194	178	–
		in.	3.54	3.54	4.72	2.36	7.64	7.01	–
AF 16-25 (DOT)	25 KF	mm	110	125	142	71	214	193	–
		in.	4.33	4.92	5.59	2.80	8.43	7.60	–
AF 40-65 (DOT)	40 KF	mm	170	157	170	85	300	272	261
		in.	6.69	6.18	6.69	3.35	11.81	10.71	10.28

*) Supporting screw only for AF 40-65

Dimensional drawing for the AF exhaust filters

Typical Application

Improvement of oil separating capacity.

Technical Information

An exhaust line must be connected in case of hazardous exhaust gases.

Technical Data

	AF 4-8	AF 16-25	AF 40-65	AF 16-25 DOT	AF 40-65 DOT
Connection to pump TRIVAC	D 4/8 B	D 16/25 B/BCS	D 40/65 B/BCS	D 16/25 B-DOT	D 40 B-DOT
Max. capacity for condensate, approx. l (qt)	0.4	0.5	1.0	-	-
Weight kg (lbs)	1.9	3.2	6.5	-	-

Ordering Information

	AF 4-8	AF 16-25	AF 40-65	AF 16-25 DOT	AF 40-65 DOT
	Part No.	**Part No.**	**Part No.**	**Part No.**	**Part No.**
Exhaust filter	**189 06**	**189 11**	**189 16**	**124 16**	**101 15**
Replacement filter element					
FE 4-8	**189 71**	**-**	**-**	**-**	**-**
FE 16-25	**-**	**189 72**	**-**	**-**	**-**
FE 40-65	**-**	**-**	**189 73**	**-**	**-**
FE 16-25 DOT	**-**	**-**	**-**	**E 200 10 304**	**-**
FE 40-65 DOT	**-**	**-**	**-**	**-**	**E200 39 840** [1]
Oil drain tap M 16 x 1.5 (vacuum-tight)	**190 90**	**190 90**	**190 90**	**-**	**-**

[1] 2 pieces are required

Exhaust Filters with Lubricant Return ARP 4-8 and AR 4-8 to AR 40-65

AR 4-8 exhaust filter with lubricant return

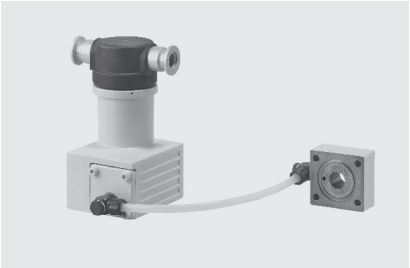

ARP 4-8 exhaust filter with lubricant return

This combination of an exhaust filter with a float-controlled valve considerably extends the maintenance intervals for the TRIVAC pumps.

Advantages to the User

- Filtering the exhaust air of entrained lubricant particles
- Lubricant return with the aid of a float-controlled valve back into the intake port
- No operating costs caused by lost lubricant
- Hardly any oil consumption
- Standard filter element
- Built-in over-pressure relief valve
- Resists solvents
- All seals made of FPM (FKM)
- Easy change of the return port for horizontal or vertical connection

Typical Application

Extending the maintenance intervals.

Supplied Equipment

Intermediate flange, connecting lines with hollow screws, required gaskets as well as mounting screws for the intake flange.

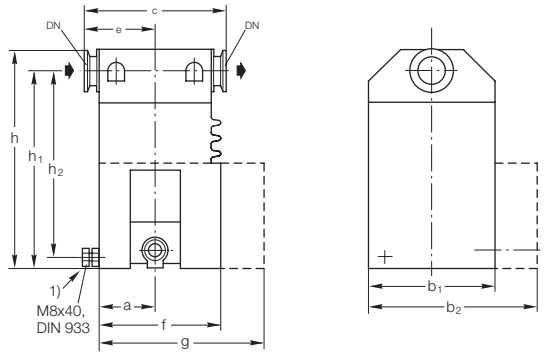

Type	DN		a	b_1	b_2	c	e	f	g	h	h_1	h_2
AR 4-8	16 KF	mm	45	90	136	120	60	100	113	194	179	167
		in.	1.77	3.54	5.35	4.72	2.36	3.94	4.37	7.64	7.05	6.57
AR 16-25	25 KF	mm	55	125	167	142	71	120	–	214	194	182
		in.	2.17	4.92	6.57	5.59	2.80	4.72	–	8.43	7.64	7.17
AR 40-65	40 KF	mm	70	156	–	170	85	152	195	300	271	261
		in.	2.76	6.14	–	6.69	3.35	5.98	7.68	11.8	10.7	10.3

1) Supporting screw only for AR 40-65

Dimensional drawing for the AR exhaust filters with lubricant return
(dimensions for the ARP exhaust filter with lubricant return upon request)

Technical Data

		ARP 4-8	AR 4-8	AR 16-25	AR 40-65
Connection to pump	TRIVAC	D 4/8 B	D 4/8 B	D 16/25 B/BCS	D 40/65 B/BCS
For opening the float-controlled valve required amount of oil					
LEYBONOL LVO 100	cm^3	–	430 (0.45)	510 (0.54)	760 (0.80)
LEYBONOL LVO 400	cm^3	–	350 (0.37)	430 (0.45)	700 (0.74)
Verbleibende Schmiermittel-Menge					
LEYBONOL LVO 100	cm^3 (qt)	–	290 (0.31)	340 (0.36)	420 (0.44)
LEYBONOL LVO 400	cm^3 (qt)	–	250 (0.26)	300 (0.32)	390 (0.41)
Weigh	kg (lbs)	1.7 (3.8)	3.1 (6.89)	4.7 (10.4)	8.5 (18.7)

Ordering Information

	ARP 4-8	AR 4-8	AR 16-25	AR 40-65
	Part No.	**Part No.**	**Part No.**	**Part No.**
Exhaust filter with lubricant return	**140 065**	**189 20**	**189 21**	**189 22**
Replacement filter element				
FE 8	**ES19080**	**–**	**–**	**–**
FE 4-8	**–**	**189 71**	**–**	**–**
FE 16-25	**–**	**–**	**189 72**	**–**
FE 40-65	**–**	**–**	**–**	**189 73**

Technical Information

The AR is connected to the exhaust port of the TRIVAC B, the return line is connected at the intermediate flange under the intake port.
An exhaust line must be connected in case of hazardous exhaust gases.

The ARP and AR filters are factory cleaned to such an extent, that they may be operated either with mineral oil (e.g. LEYBONOL LVO 100) or perfluoropolyether (PFPE) (e.g. LEYBONOL LVO 400).

Exhaust Filters with Lubricant Return ARS 16-25 and ARS 40-65

ARS 40-65

This combination of an exhaust filter with a float-controlled valve considerably extends the maintenance intervals of the TRIVAC BCS.

The ARS is part of the TRIVAC SYSTEM.

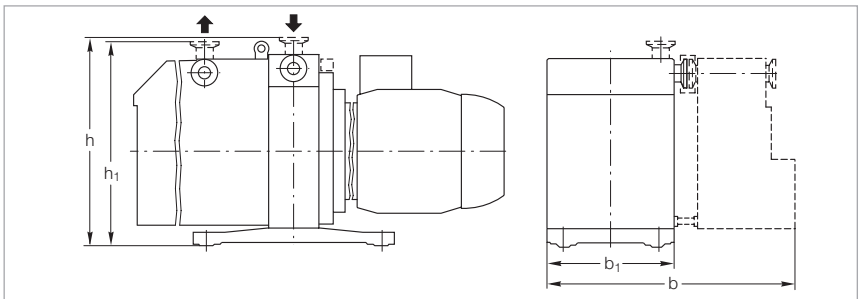

Type		b	b_1	h	h_1
ARS 16-25	mm	≈ 360	176	282	264
	in.	≈ 14.2	6.93	11.1	10.4
ARS 40-65	mm	≈ 468	234	381	356
	in.	≈ 18.4	9.21	15.0	14.0

Dimensional drawing for the ARS mounted on a TRIVAC BCS

Advantages to the User

- Lubricant return with the aid of a float-controlled valve back into the intake port
- The intake port may be easily exchanged (either vertical or horizontal orientation)
- No operating costs caused by lost lubricant
- Hardly any oil consumption
- Visual indication of the differential pressure
- Standard filter element
- All aluminium parts are surface protected
- Built-in over-pressure relief valve
- Resists solvents
- All seals made of FPM (FKM)

Typical Application

Filtering the exhaust air of entrained lubricant particles.

Supplied Equipment

Intermediate flange, connecting lines with hollow screws, required gaskets as well as mounting screws for the intake flange.

Wrapped in foil for shipping.

Technical Information

An exhaust line must be connected in case of hazardous exhaust gases.The ARS is connected to the exhaust port of the TRIVAC BCS, the return line is connected at the intermediate flange under the intake port.

The ARS is factory cleaned to such an extent, that it may be operated either with mineral oil (e.g. LEYBONOL LVO 100) or perfluoropolyether (PFPE) (e.g. LEYBONOL LVO 400).

Technical Data		ARS 16-25	ARS 40-65
Connection to pump	TRIVAC	D 16/25 B D 16/25 BCS (-PFPE)	D 40/65 B D 40/65 BCS (-PFPE)
Connection flanges	DN	25 KF	40 KF
Amount of oil required for opening the float-controlled valve			
LEYBONOL LVO 100	cm³ (qt)	510 (0.54)	760 (0.80)
LEYBONOL LVO 400	cm³ (qt)	340 (0.36)	420 (0.44)
Remaining amount of oil			
LEYBONOL LVO 100	cm³ (qt)	430 (0.45)	700 (0.74)
LEYBONOL LVO 400	cm³ (qt)	300 (0.31)	390 (0.41)
Weight with intermediate flange, tubing and filter, without lubricant	kg (lbs)	4.7 (10.4)	8.5 (16.7)

Ordering Information	ARS 16-25	ARS 40-65
	Part No.	Part No.
Exhaust filter with lubricant return	**189 56**	**189 57**
Replacement filter element		
FE 16-25	**189 72**	**–**
FE 40-65	**–**	**189 73**

Oil Drain Tap

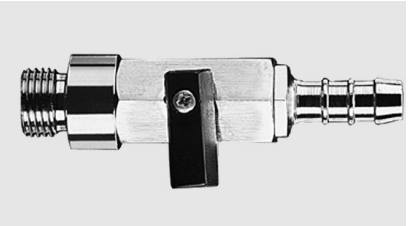

This oil drain tap may be screwed into the oil drain when wanting to change the oil in the rotary vane pumps. It is also suited for the condensate separators and exhaust filters of the TRIVAC B series.

	a	l	l_1	l_2
mm	10.5	76	22	11
in.	0.41	2.99	0.87	0.43

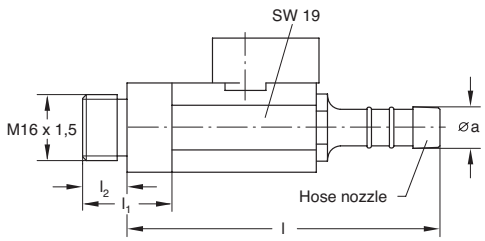

Dimensional drawing for the oil drain tap

Technical Data — Oil Drain Tap

Leak rate	mbar x l/s	≤ 10^{-5}

Ordering Information — Oil Drain Tap

	Part No.
Oil drain tap	**190 90**

Oil Drain Kit

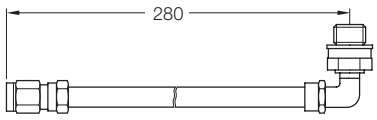

l = 280 mm = 11 in.

Dimensional drawing for the oil drain kit

Technical Data — Oil Drain Kit

Length	mm (in)	280 (11)
Leak rate	mbar x l/s	≤ 10^{-5}

Ordering Information — Oil Drain Kit

	Part No.
Oil drain kit	**190 94**

Oil Suction Facility AR-V Controlled by Solenoid Valve

Suited for the AF 8 or AK 8 when connected to the D 2.5 E the oil suction facility AR-V with its solenoid valve allows the removal of oil via the gas ballast which has collected in the exhaust filter. When the valve is closed the gas ballast remains fully operational.
For this, a hose link is provided between the exhaust filter and the gas ballast.

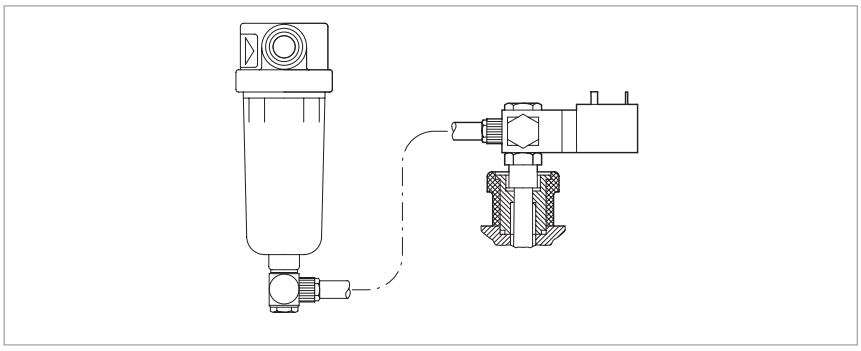

AR-V oil suction facility controlled by solenoid valve (kit without exhaust filter)

Technical Note

If oil which has collected in the exhaust filter is to be removed, the solenoid valve is opened briefly.

Technical Data		AR-V Oil Suction Facility Controlled by Solenoid Valve
Leak rate	mbar x l/s	$\leq 10^{-5}$

Ordering Information	AR-V Oil Suction Facility Controlled by Solenoid Valve
	Part No.
AR-V oil suction facility controlled by solenoid valve 24 V DC, 4 W, normally closed	**190 92**

Manually Operated Oil Suction Facility AR-M

Suited for the AF 8 or AK 8 when connected to the D 2.5 E the oil suction facility AR-M allows the removal of oil via the gas ballast which has collected in the exhaust filter, whereby the gas ballast remains fully operational as long as the angled ball valve remains closed.
For this, a hose link is provided between the exhaust filter and the gas ballast.

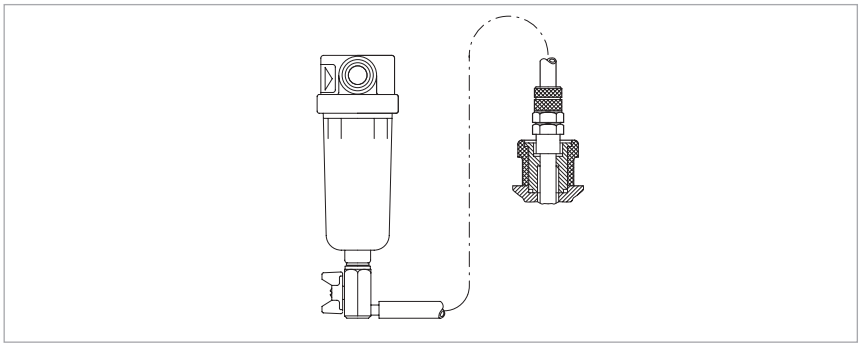

AR-M manually operated oil suction facility (kit without exhaust filter)

Technical Note

If oil which has collected in the exhaust filter is to be removed, the angled ball valve is manually opened briefly.

Technical Data		AR-M Manually Operated Oil Suction Facility
Leak rate	mbar x l/s	$\leq 10^{-5}$

Ordering Information	AR-M Manually Operated Oil Suction Facility
	Part No.
AR-M manually operated oil suction facility	**190 93**

Condensate Separators
AK 4-8 to AK 40-65

AK 4-8 condensate separator

Separators protect the pump against condensate.

Advantages to the User

- May be installed without accessories
- May be used either on the intake or the exhaust side
- Independent of the direction of flow
- Condensate level check via inspection glass
- Resists solvents
- All seals made of FPM (FKM)
- Simple to clean
- Easy to use
- Drained via drain screw or drain tap

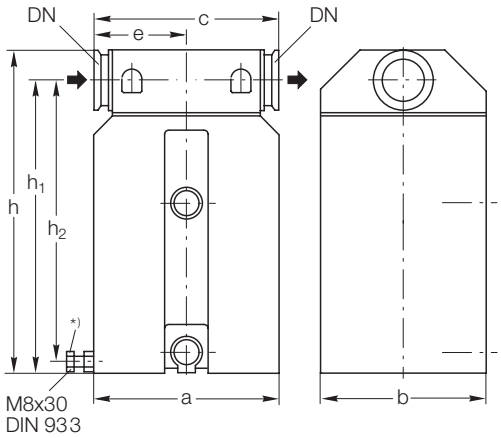

Type	DN		a	b	c	e	h	h_1	h_2
AK 4-8	16 KF	mm	90	90	120	60	194	178	–
		in.	3.54	3.54	4.72	2.36	7.64	7.01	–
AK 16-25	25 KF	mm	110	125	142	71	214	193	–
		in.	4.33	4.92	5.59	2.80	8.43	7.60	–
AK 40-65	40 KF	mm	140	156	170	85	300	271	261
		in.	5.51	6.14	6.69	3.35	11.8	10.7	10.3

*) Supporting screw, only for AK 40-65

Dimensional drawing for the AK condensate separators

Typical Application

Prevention of the collection of liquids in the intake line.

Technical Information

Depending upon the layout and pipe run of an exhaust line, it may be necessary to install a separator to prevent condensate draining back to the pump.

Technical Data

		AK 4-8	AK 16-25	AK 40-65
Connection to pump	**TRIVAC**	D 4/8 B	D 16/25 B D 16/25 BCS (-PFPE)	D 40/65 B D 40/65 BCS (-PFPE)
Capacity for condensate	**l (qt)**	0.66 (0.7)	1.2 (1.3)	3.0 (3.2)
Weight	**kg (lbs)**	1.7 (3.7)	2.4 (5.3)	5.5 (12.1)

Ordering Information

	AK 4-8	AK 16-25	AK 40-65
	Part No.	**Part No.**	**Part No.**
Condensate separator	**188 06**	**188 11**	**188 16**
Oil drain tap M 16 x 1.5 (vacuum-tight)	**190 90**	**190 90**	**190 90**
Adaptor DN 16 KF – hose nozzle DN 7	**182 90**	**–**	**–**

Dust Filters DN 16 KF to DN 40 KF

Filter housing FH 16 to FH 40 for dust filter insert DF

Dust filters protect the pump against sucked in dust. They are suited for oil sealed and also for dry compressing pumps.

Advantages to the User

- Easy to disassemble
- Vacuum-tight steel housing
- Easily exchangeable replacement filter
- High filter capacity

Technical Information

Installing a dust filter in the intake line of the pump throttles its pumping speed at lower intake pressures much more than at higher intake pressures. Throttling reference values are stated in the Technical Data. These must be taken into account when dimensioning the vacuum system.

Since the collection capacity of dust filters is limited, we recommend the two-stage dust filters AS when larger quantities of dust are involved.

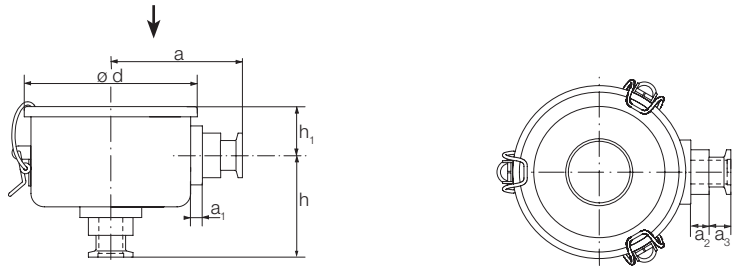

Type	DN		a	a_1	a_2	a_3	d	h	h_1
FH 16	16 KF	mm	96	11	12	15	133	65	46
		in.	3.78	0.43	0.47	0.59	5.24	2.56	1.81
FH 25	25 KF		96	11	12	15	133	65	46
		in.	3.78	0.43	0.47	0.59	5.24	2.56	1.81
FH 40	40 KF		123	11	12	15	176	106	76
		in.	4.84	0.43	0.47	0.59	6.93	4.17	2.99

Dimensional drawing for the filter housings FH 16 to FH 40 for dust filter inserts DF

Technical Data

		Dust Filter		
		DN 16 KF	DN 25 KF	DN 40 KF
Use for	TRIVAC	D 4/8 B	D 16/25 B	D 40/65 B
Share of filtered out particles > 5 µm	%	98	98	98
Throttling of pumping speed				
at 10 mbar (7.5 Torr)	%	3	3	3
at 1 mbar (0.75 Torr)	%	6	6	6
Weight with dust filter insert	kg (lbs)	1.3 (2.9)	1.3 (2.9)	2.3 (5.1)

Ordering Information

	Dust Filter		
	DN 16 KF	DN 25 KF	DN 40 KF
	Part No.	Part No.	Part No.
Dust filter			
filter housing FH [1]	**140 116T**	**140 125T**	**140 140T**
dust filter insert			
DF 16-25	**140 117S**	**140 117S**	**–**
DF 40-65	**–**	**–**	**140 141S**

[1] The filter housing is supplied without filter cartridge (dust filter insert) since it may also be used in connection with the adsorption trap or dust filter insert

Adsorption Traps DN 16 KF to DN 40 KF

Filter housing FH 16 to FH 40
for adsorption trap filter inserts RF

Adsorption traps are containers with a stainless steel insert which can be filled with a number of different adsorbents thereby offering a high adsorbing capacity for vapors, water vapor in particular.

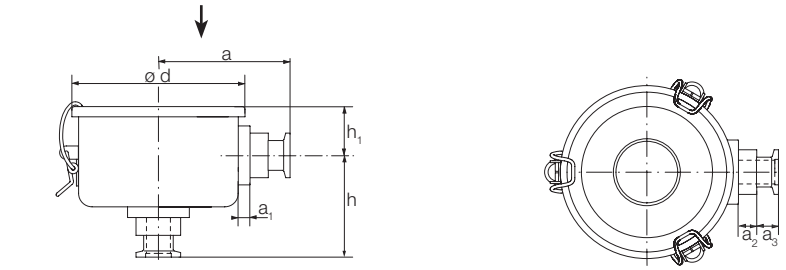

Type	DN		a	a_1	a_2	a_3	d	h	h_1
RF 16	16 KF	mm	96	11	12	15	133	65	46
		in.	3.78	0.43	0.47	0.59	5.24	2.56	1.81
RF 25	25 KF	mm	96	11	12	15	133	65	46
		in.	3.78	0.43	0.47	0.59	5.24	2.56	1.81
RF 40	40 KF	mm	123	11	12	15	176	106	76
		in.	4.84	0.43	0.47	0.59	6.93	4.17	2.99

Dimensional drawing for the filter housings FH 16 to FH 40 for adsorption trap filter inserts RF

Advantages to the User

- Vacuum-tight steel housing
- Stainless steel, degassable up to 300 °C (572 °F)
- Different adsorbents and separating elements can be used
- Quick to replace
- Easy to disassemble

Technical Information

The adsorption traps have been developed specially for use in connection with oil sealed pumps. They are capable of retaining oil vapors discharged from forevacuum pumps and are at the same time in the position to separate vapors (water vapor) coming from the side of the process. Through the use of adsorption traps and a suitable adsorbent, a vacuum free of hydrocarbons can be produced. The stainless steel inserts with the corresponding adsorbent can be heated in a drying cabinet at 300 °C (572 °F) for regeneration. Depending on the type of adsorbent and operating pressure, the pumping speed of the pumps is reduced.

As to any questions relating to the selection of a suitable absorbent, please consult us.

Technical Data

		Adsorption Trap		
		DN 16 KF	DN 25 KF	DN 40 KF
Use for	TRIVAC	D 4/8 B	D 16/25 B	D 40/65 B
Conductance				
at 10 mbar (7.5 Torr) for				
aluminium oxide	l/s	2	6	14
zeolite	l/s	2	6	12
active charcoal filling	l/s	2	6	16
baffle ring filling	l/s	2	7	18
at 1 mbar (0.75 Torr) for				
aluminium oxide	l/s	1	4	5
zeolite	l/s	1	6	5
active charcoal filling	l/s	2	6	6
baffle ring filling	l/s	2	6	16
Filling quantity				
aluminium oxide	kg (lbs)	0.3 (0.7)	0.3 (0.7)	1.0 (2.2)
zeolite	kg (lbs)	0.2 (0.4)	0.2 (0.4)	0.7 (1.5)
active charcoal filling	kg (lbs)	0.1 (0.2)	0.1 (0.2)	0.5 (1.1)
baffle ring filling	kg (lbs)	0.1 (0.2)	0.1 (0.2)	0.3 (0.7)
Filling volume	l (qt)	0.3 (0.3)	0.3 (0.3)	1.2 (1.3)
Weight with adsorption trap insert	kg (lbs)	1.3 (2.9)	1.3 (2.9)	2.3 (5.1)

Ordering Information

	Adsorption Trap		
	DN 16 KF	DN 25 KF	DN 40 KF
	Part No.	Part No.	Part No.
Adsorption trap			
filter housing FH [1]	**140 116T**	**140 125T**	**140 140T**
adsorption trap filter insert			
RF 16-25	**140 118A**	**140 118A**	**–**
RF 40-65	**–**	**–**	**140 142A**
Active charcoal, un-dried, 5 kg	**178 10**	**178 10**	**178 10**
Zeolite, 1 kg	**854 20**	**854 20**	**854 20**
Aluminium oxide, 1.2 kg	**854 10**	**854 10**	**854 10**
Baffle ring 15 x 15 x 0.3, 1 liter Stainless steel 1.4301	**390 26 126**	**390 26 126**	**390 26 126**

[1] The filter housing is supplied without filter cartridge (dust filter insert) since it may also be used in connection with the adsorption trap or dust filter insert

Cold Trap TK 4-8

TK 4-8 cold trap

The cold trap protects the pump against damaging vapors.

Advantages to the User

- Rugged and implosion resistant
- May be fitted directly on the flange of the pump
- Safe draining of the condensate without problems
- Casing made of corrosion resistant stainless steel
- Simple filling with refrigerant (liquid nitrogen (LN_2) or a mixture of acetone and carbon di-oxide ice)

Typical Applications

- Prevention of oil from backstreaming into the vacuum system when operating at ultimate pressure
- Freezing of gases and vapors in the laboratory

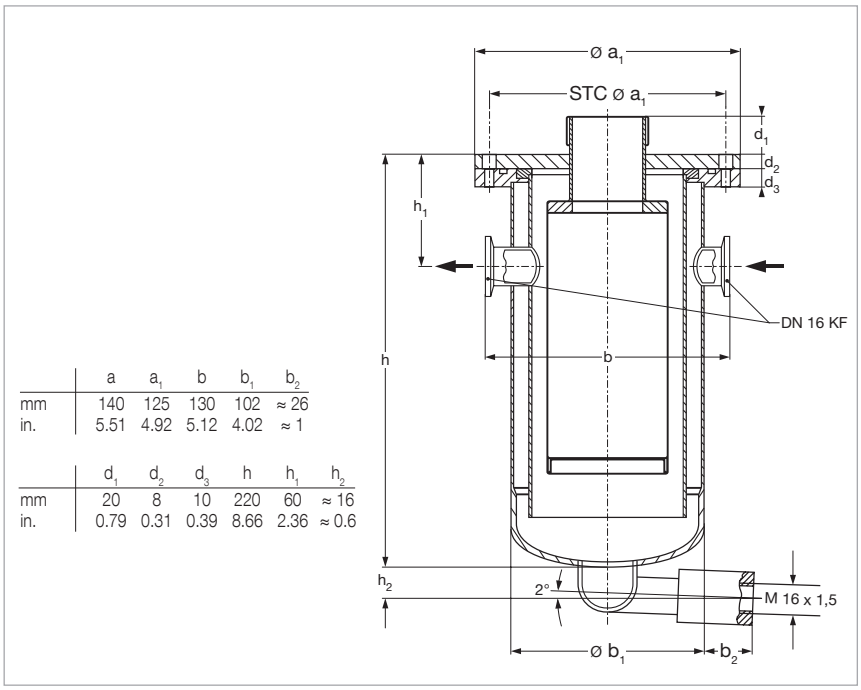

	a	a_1	b	b_1	b_2
mm	140	125	130	102	≈ 26
in.	5.51	4.92	5.12	4.02	≈ 1

	d_1	d_2	d_3	h	h_1	h_2
mm	20	8	10	220	60	≈ 16
in.	0.79	0.31	0.39	8.66	2.36	≈ 0.6

Dimensional drawing for the TK 4-8 cold trap

Technical Data — TK 4-8

Connection to pump	**TRIVAC**	D 2,5 E, D 4/8 B
Capacity for refrigerant, approx.	**l (qt)**	0.4 (0.42)
Connections	**DN**	16 KF
Weight	**kg (lbs)**	4 (8.8)

Ordering Information — TK 4-8

	Part No.
Cold trap	**188 20**
Drain tap for the intake side, vacuum-tight	**190 90**
Elbow (1x)	**184 36**
Centering ring	
aluminium/NBR (2x)	**183 26**
stainless steel/FPM (FKM) (2x)	**883 46**
Clamping ring (2x)	**183 41**

Dust Separators AS 8-16 and AS 30-60

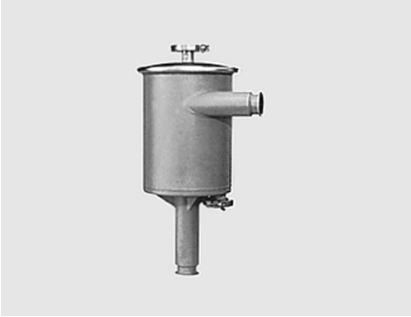

AS 30-60 dust separator

Dust separators protect pumps against contamination and damage by sucked-in dust.

Advantages to the User

- Dust separators for large quantities of dust
- Two-stage, thus hardly any throttling
- Cyclone (for coarse dust) and wet filter (for fine dust)

Typical Application

Separation of coarse and medium size dust starting at a grain size of 2 µm.

Technical Information

Installing a dust filter in the intake line of the pump will throttle its pumping speed at low intake pressures more than at higher intake pressures. This must be taken into account when designing a vacuum system.

Even when large quantities of dust are deposited, the throttling effect will hardly increase.

Supplied Equipment

Blanked off drain port.

Technical Data

		AS 8-16		AS 30-60	
Connection to pump	TRIVAC	D 16 B	D 25 B	D 40 B	D 65 B
Throttling of the pumping speed					
at 1 mbar (0.75 Torr)					
intake pressure, approx.	%	10	15	8	16
at 10 mbar (7.5 Torr)					
intake pressure, approx.	%	5	7	4	9
Capacity for dust	l (qt)	0.6 (0.63)	0.6 (0.63)	2.0 (2.11)	2.0 (2.11)
Capacity for resin vapors or similar	kg (lbs)	–	–	–	–
Impact ring filling	l (qt)	0.5 (0.53)	0.5 (0.53)	3.5 (3.7)	3.5 (3.7)
Active charcoal filling	kg (lbs)	–	–	–	–
Weight	kg (lbs)	4.5 (9.9)	4.5 (9.9)	18.4 (40.6)	18.4 (40.6)

Ordering Information

	AS 8-16	AS 30-60
	Part No.	Part No.
Dust separator	186 11	186 16
Molecular filter	–	–
Replacement filter insert	–	178 43

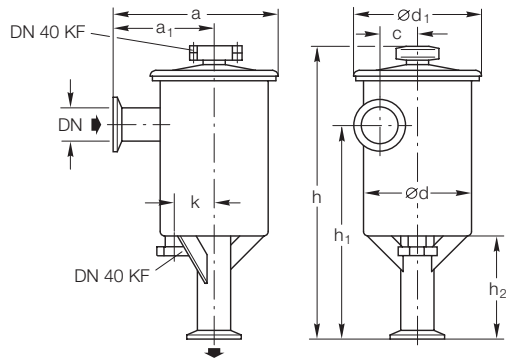

Type	DN		a	a_1	c	⌀d	⌀d_1	h	h_1	h_2	k
AS 8-16	25 KF	mm	181	100	43	133	162	247	150	37	–
		in.	7.13	3.94	1.69	5.24	6.38	9.72	5.91	1.46	–
AS 30-60	40 KF	mm	310	190	70	205	234	530	395	190	75
		in.	12.2	7.48	2.76	8.07	9.12	20.9	15.6	7.48	2.95

Dimensional drawing for the AS dust separators

Notes

Mechanical Oil Filters OF 4-25 and OF 40-65 / Chemical Oil Filters CF 4-25 and CF 40-65

OF 4-25 mechanical oil filter

Since there is a pressure-lubrication system with an oil pump in every TRIVAC B, it is possible to connect main flow oil filters.

These filters are available either for mechanical filtering (OF types) or combined chemical/mechanical filtering (CF types).

OF/CF 4-25

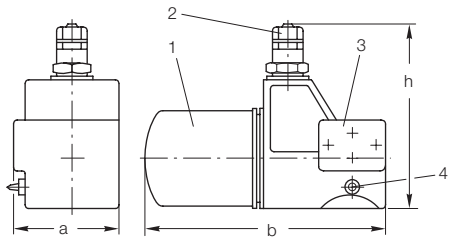

1 Interchangeable filter
2 Maintenance indicator
3 Connection flange
4 Pin for protection against twisting

OF/CF 40-65

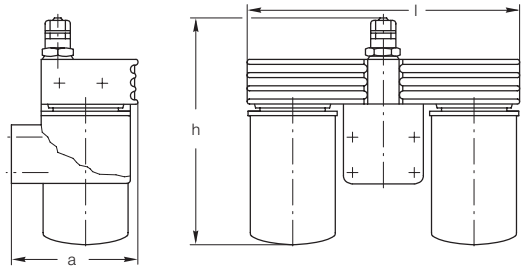

Type		a	b	h	l
OF 4-25	mm	100	200	150	–
	in.	4.0	7.87	5.91	–
CF 4-25	mm	100	315	160	–
	in.	4.0	12.4	6.30	–
OF 40-65	mm	135	–	239	296
	in.	5.31	–	9.41	11.7
CF 40-65	mm	135	–	307	296
	in.	5.31	–	12.1	11.7

Dimensional drawings for the OF mechanical oil filters and CF chemical oil filters

Advantages to the User

- Main flow oil filter
- Longer service life for the oil depending on the type of application
- Can be installed without problems to the TRIVAC B
- Hose connections are not required
- Easily interchangeable filters
- Only a small amount of oil needs to be added when changing the filters
- Expansion of the range of applications in case of special requirements
- Same casing for OF and CF types
- Greater reliability by standard maintenance indicator
- Built-in bypass valve
- Owing to the highly effective adsorbent for polar substances, an up to ten-fold adsorption effect is attained over normal bleaching earth (CF)
- Prevents mechanical damage to the pump

Typical Application

Separation of fine particles from the pump's oil (sizes between 5 and 10 µm (OF)).

Technical Data

		OF 4-25	CF 4-25	OF 40-65	CF 40-65
Connection to pump	TRIVAC	D 4/8 B, D 16/25 B	D 4/8 B, D 16/25 B	D 40/65 B	D 40/65 B
Nominal throughput	l/h	900	900	2000	2000
Separation					
mechanical oil filter	µm	5 to 10	5 to 10	5 to 10	5 to 10
chemical oil filter	µm	to 3	to 3	to 3	to 3
Permissible operating pressure	bar (psig)	2.5 (21.7)	2.5 (21.7)	2.5 (21.7)	2.5 (21.7)
Opening pressure					
non-return valve	bar (psid)	0.12 (1.7)	0.12 (1.7)	0.12 (1.7)	0.12 (1.7)
bypass valve	bar (psid)	2.5 ±0.3 (21.7 ±4.3)	2.5 ±0.3 (21.7 ±4.3)	2.5 ±0.3 (21.7 ±4.3)	2.5 ±0.3 (21.7 ±4.3)
Topping up amount during					
first time installation	l (qt)	1.0 (1.1)	1.0 (1.1)	2.5 (2.6)	2.5 (2.6)
filter exchange	l (qt)	1.0 (1.1)	1.0 (1.1)	2.0 (2.1)	2.0 (2.1)
Weight, ready for operation, dry	kg (lbs)	4 (8.8)	4 (8.8)	10 (22.1)	10 (22.1)

Ordering Information

	OF 4-25	CF 4-25	OF 40-65	CF 40-65
	Part No.	**Part No.**	**Part No.**	**Part No.**
Mechanical oil filter	**101 91**	–	**101 92**	–
Chemical oil filter	–	**101 96**	–	**101 97**
WF 4-25 interchangeable filter, paper, 0.5 l (0.5 qt)	**189 91**	–	–	–
WF 40-65 interchangeable filter, paper, 0.75 l (0.8 qt)	–	–	**189 92** [1]	**189 92** [1]
WF Alu 4-65 interchangeable filter, paper and Al_2O_3, 1 l (1.1 qt)	–	**189 96**	–	**189 96** [1]

[1] 2 pieces are required

Chemical Filters with Safety Isolation Valve CFS 16-25 and CFS 40-65

CFS 40-65

The CFS chemical filters with safety isolation valve are main flow oil filters for the TRIVAC B and BCS pumps.

The CFS is part of the TRIVAC SYSTEM.

Advantages to the User

- The CFS is included in the main lubricant flow
- Rapid filter exchange
  - the pump may continue to operate while changing the filters
- Visual indication of the filter's condition through a maintenance indicator
- Aluminium component with isolation valve for one or two interchangeable filters
- All aluminium parts are surface protected
- May be operated with different interchangeable filters
- Over-pressure relief valve in the interchangeable filters
- Prepared for connection of a differential pressure switch and an oil pressure switch
- May also be used on the TRIVAC B pumps

Type		b	b_1	h
CFS 16-25	mm	327	176	264
	in.	12.9	6.9	10.4
CFS 40-65	mm	390	234	356
	in.	15.4	9.21	14.0

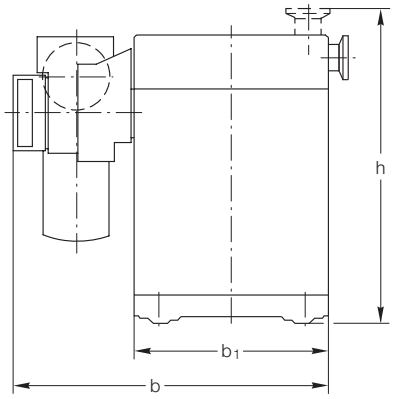

Dimensional drawing for the CFS (mounted on a TRIVAC BCS)

Technical Information

The CFS is cleaned in the factory to such an extent, that it may be operated either with mineral oil (e.g. LEYBONOL LVO 100) or perfluoro-polyether (PFPE, e.g. LEYBONOL LVO 400).

Supplied Equipment

All gaskets and mounting parts required for installation.

Aluminium particle filters (WF Alu-Part) sealed for shipping are included separately.

Technical Data		CFS 16-25	CFS 40-65
Connection to pump	TRIVAC	D 16/25 B D 16/25 BCS (-PFPE)	D 40/65 B D 40/65 BCS (-PFPE)
Nominal throughput	l/h	900	2000
Permissible operating pressure	bar (psig)	2.5 (21.7)	2.5 (21.7)
Opening pressure			
Non-return valve	bar (psid)	2.5 (21.7)	2.5 (21.7)
Bypass valve	bar (psid)	2.5 ±0.3 (21.7 ±4.3)	2.5 ±0.3 (21.7 ±4.3)
Filter medium		Al_2O_3	Al_2O_3
Lubricant filling when using WF Alu-Part	l (qt)	1.4 (1.5)	3.3 (3.5)
Weight, ready for operation, dry	kg (lbs)	7.0 (15.4)	15.5 (34.1)

Ordering Information	CFS 16-25	CFS 40-65
	Part No.	Part No.
Chemical filter with safety isolation valve	**101 76**	**101 77**
WF Alu-Part combination filter, paper and Al_2O_3, 1.6 l (1.7 qt)	**189 99**	**189 99** [1]
WFG particle filter, paper with support mesh, 1 l (1.1 qt)	**189 90**	**189 90** [1]

[1] 2 pieces are required

Inert Gas System IGS 16-25 and IGS 40-65

IGS

This accessory, which is controlled via solenoid valves, permits the controlled admission of special gases into the TRIVAC BCS.

The IGS is part of the TRIVAC SYSTEM.

Type		b	b_1	h
IGS 16-25	mm	176	294	264
	in.	6.93	11.6	10.4
IGS 40-65	mm	234	369	356
	in.	9.21	14.5	14.0

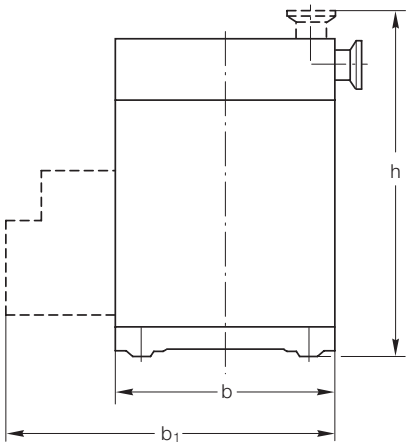

Dimensional drawing for the IGS (mounted on a TRIVAC BCS)

Advantages to the User

- Ready for connection to an inert gas supply
- Solenoid valve for reduced gas ballast
- Solenoid valve for purging the oil box
- Float throughput gauge with throttling valve adjustable from 200 to 700 l/h
- The flowing quantity can be read directly
- System protection by a non-return valve (requires a reservoir pressure of at least 3 bar (29 psi, gauge)) – this reliably prevents the reservoir vessel from being evacuated
- Connects directly on to the TRIVAC BCS

Typical Applications

- Reduction of the contamination levels in the lubricant
- Reduction in the dwell time of volatile substances within the pump

Technical Information

The amount of inert gas ballast is restricted by a nozzle to 200 l/h. Larger quantities are used for purging.

Supplied Equipment

Solenoid valves with connection cables and plugs, the required connecting pieces, mounting screws and cover panel.

Technical Data		IGS 16-25	IGS 40-65
Connection to pump	**TRIVAC**	D 16/25 BCS (-PFPE)	D 40/65 BCS (-PFPE)
Min. amount of admitted gas at a reservoir pressure of 3.0 bar (29 psig)	**l/h**	200	200
Max. amount of admitted gas at a reservoir pressure of 6.0 bar (72.5 psig)	**l/h**	1450	1450
Supply voltage for the solenoid valves	**V DC**	24	24
Power consumption	**W**	10	10
Weight	**kg (lbs)**	1.0 (2.2)	1.4 (3.1)
Connection thread	**G (BPS)**	1/8"	1/8“

Ordering Information	IGS 16-25	IGS 40-65
	Part No.	**Part No.**
Inert gas system	**161 76**	**–**
Inert gas system, UL conform	**–**	**161 68V**

Limit Switch System
LSS 16-25 and LSS 40-65

LSS

This accessory consists of a package of limit switches. It is used to monitor system functions.

The LSS is part of the TRIVAC SYSTEM.

The package of limit switches includes:

- Differential pressure switch to monitor the CFS
- Oil pressure switch to monitor the operating pressure
- Flow switch to monitor the inert gas flow
- Pressure switch to monitor the pressure in the oil box of the pump
- Connection cable and plug for the temperature switch used for temperature monitoring
- Float switch with housing to monitor the oil level

Advantages to the User

- Errors are indicated well in advance so that it will in most cases be possible to complete the process for the running batch
- The switching action is independent of the optical displays (for optimum reliability)
- The temperature switch is already present in the TRIVAC BCS

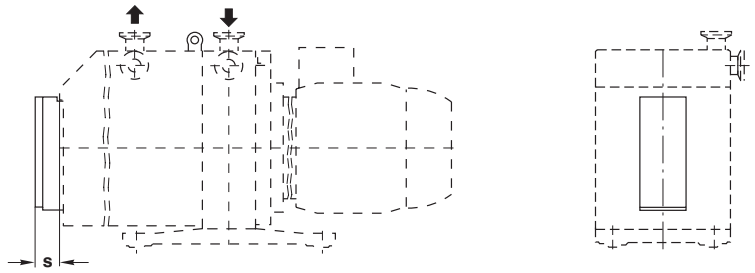

Type		s
LSS 16-25	mm	55
	in.	2.17
LSS 40-65	mm	51
	in.	2.01

Dimensional drawing for the LSS (mounted on a TRIVAC BCS)

Typical Application

Changing the status in case operating conditions arise which are not permissible.

Supplied Equipment

Fully wired-up switches with plugs as well as all required gaskets and mounting parts.

Technical Data		LSS 16-25	LSS 40-65
Connection to pump	**TRIVAC**	D 16/25 BCS (-PFPE)	D 40/65 BCS (-PFPE)
Operating voltage	**V DC**	24	24
Switching capacity	**W / A**	10.0 / 0.4	10.0 / 0.4
Type of protection	**IP**	54	54
Weight, approx.	**kg (lbs)**	2.5 (5.5)	2.5 (5.5)

Ordering Information	LSS 16-25	LSS 40-65
	Part No.	**Part No.**
Limit switch system	**161 06**	**161 07**

Roots Pump Adaptor

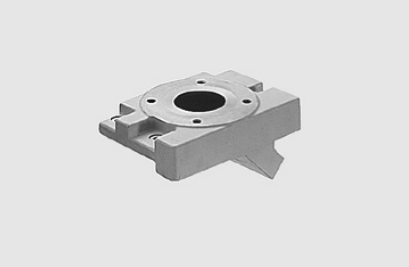

Roots pump adaptor

The Roots pump adaptor allows the direct installation of a Roots pump on a TRIVAC D 40/65 B/BCS.

Advantages to the User

- Compact and space-saving
- Short and direct connection between the pumps
- Minimal conductance loss
- Easy installation

Typical Application

Simple assembly of a small pump system.

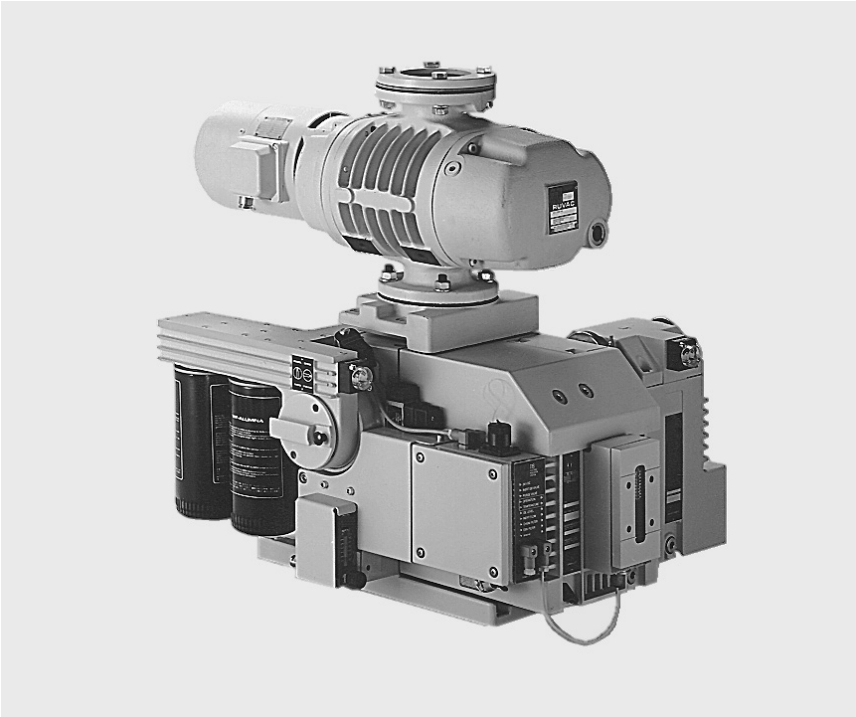

Pump system consisting of a TRIVAC D 65 BCS and a RUVAC WS 251

Technical Data		Roots Pump Adaptor
Connection to pump	TRIVAC	D 40/65 B/BCS (-PFPE) and RUVAC WA/WAU/WS/WSU 251
Weight, approx.	kg (lbs)	11.5 (25.4)

Ordering Information	Roots Pump Adaptor
	Part No.
Roots pump adaptor	**168 30**

Only available for purchase in North and South America

SE Smoke Eliminator

SE smoke eliminator

The Leybold SE smoke eliminator can be utilized on all TRIVAC B rotary vane vacuum pumps where pump fluid loss at the exhaust port must be eliminated. These filters consist of a replaceable two-stage coalescing element mounted in a steel housing. For maintenance purposes, the top of the housing can be removed by loosening a single bolt. The filter as-sembly attaches to the exhaust port of the TRIVAC pump by means of a KF flange. Since three models are available, an SE smoke eliminator is available for each TRIVAC pump model.

Advantages to the User

- Two stage design
- Three sizes for all TRIVAC models
- KF flanges

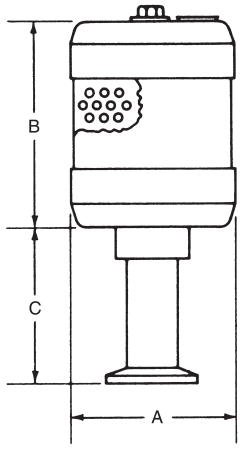

Model	Flange	Dimension	A	B	C
SE 2-4	DN 16 KF	mm	64	76	70
		in.	$2^1/_2$	3	$2^3/4$
SE 8-16	DN 25 KF	mm	127	152	51
		in.	5	6	2
SE 30-60	DN 40 KF	mm	267	121	57
		in.	$10^1/_2$	$4^3/_4$	$2^1/_4$

Dimensional drawing for the SE

Technical Data		SE 2-4	SE 8-16	SE 30-60
Connection to pump	TRIVAC	D 4/8 B	D 16/25 B	D 40/65 B

Ordering Information	SE 2-4	SE 8-16	SE 30-60
	Part No.	Part No.	Part No.
Smoke eliminator	99 171 125	99 171 126	99 171 127
Replacement element			
RE 2-4	99 171 128	–	–
RE 8-16	–	99 171 129	–
RE 30-60	–	–	99 171 130

Applications

When any oil sealed mechanical vacuum pump is used to pump a fixed volume from atmospheric pressure to some lower pressure or when a dynamic gas flow from a process stream is pumped, some mechanical pump fluid loss will occur at the exhaust of the pump. The more often a fixed volume is cycled from atmospher-ic pressure to a lower pressure or the longer a pump operates at a relatively high inlet pressure in a dynamic flow condition, the greater will be the fluid loss at the exhaust port of the pump.

By utilizing a coalescing exhaust filter for these applications, the fluid and exhaust gases are separated, and in the case of the SE smoke eliminator, the coalesced fluid is allowed to drain back into the pump fluid reservoir. Annoying oil fog to the atmosphere is thus eliminated.

Eventually, after about a year's normal operation, the coalescing element will become totally saturated and oil fog will be apparent when high inlet pressures are prevailing. The low cost coalescing element can be easily replaced.

Note: For applications where toxic, corrosive, radioactive or precious gases are pumped, we highly recommend the use of our AF coalescing exhaust filters in-stead of the SE smoke eliminator. The AF is an in-line type coalescing filter and much more suitable for these applications.

General Accessories

Flange Components, Valves

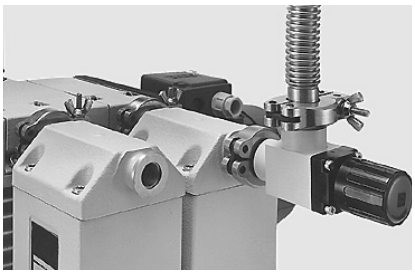

Our range of flange components and valves is described in detail in the Catalog Parts “Flanges and Fittings” and “Valves”.

Given in the following are only some components which you might find particularly useful when planning your system.

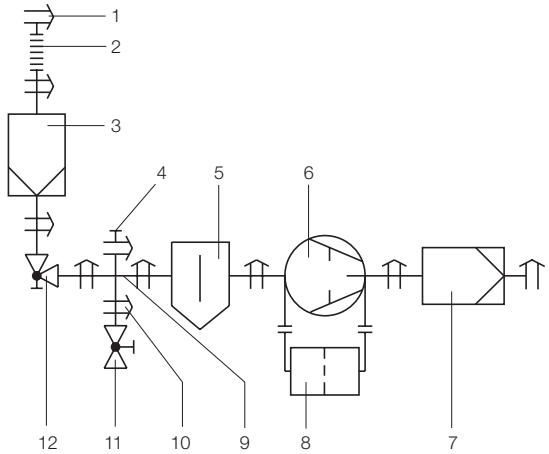

Example of connecting a pump with accessories

Isolation Valve

- The pump is allowed to warm up with the intake line isolated
- The pump may continue to operate in the energy-saving and environmentally compatible ultimate pressure mode when the vacuum chamber is vented briefly
- The pump may be left on after completion of the process so as to regenerate the oil

Branch (Cross)

Installing a cross in the intake line permits the connection of a vacuum gauge and a venting valve.

Flange Connections

Each flange connection requires one each centering and clamping ring.

Ordering Information

	DN 16 KF Part No.	DN 25 KF Part No.	DN 40 KF Part No.
Small flange connection			
Clamping ring	183 41	183 42	183 43
Centering ring, aluminium/CR	183 26	183 27	183 28
Centering ring, stainless steel/ FPM (FKM)	883 46	883 47	883 48
Bellows	872 41	872 43	872 45
Right-angled valve, manually operated			
Aluminium casing	215 375	215 376	215 377
Stainless steel casing	215 383	215 385	215 386
Blank flange for (reducing) cross			
Aluminium	184 46	184 47	184 48
Stainless steel	884 36	884 41	884 41
Reducing cross (to DN 10 KF)			
Stainless steel	–	884 92	884 94
Cross DN 16 KF			
Aluminium	184 71	–	–
Stainless steel	884 85	–	–
Small flange connection for venting valve or blank flange			
Clamping ring	183 41	183 41	183 41
(Adaptor) centering ring, aluminium/NBR	183 56	183 57	183 58
(Adaptor) centering ring, stainless steel/FPM (FKM)	883 56	883 57	883 58
Venting valve DN 10 KF			
Aluminium	173 24	173 24	173 24
Stainless steel	173 37	173 37	173 37

Miscellaneous

Services

On-site Replacement of the Dynamic Seals (with LEYBONOL LVO 100)

The on-site replacement of the dynamic seals includes the following:
Partial disassembly of the pump, replacement of the complete shaft seal, mounting of the pump including new gaskets and standard oil LEYBONOL LVO 100, electrical safety test, test run including check of the attained ultimate pressure levels.

Ordering Information — **On-site Replacement of the Dynamic Seals (with LEYBONOL LVO 100)**

	Part No.
For Pumpo	
TRIVAC D 4 B	**AS 1130 F**
TRIVAC D 8 B	**AS 1130 F**
TRIVAC D 16/25 B	**AS 1129 F**
TRIVAC D 40/65 B	**AS 1128 F**
TRIVAC D 40/65 BCS	**AS 1137 F**

Small On-site Maintenance (with LEYBONOL LVO 100)

The small on-site maintenance includes the following:
Oil change (standard LEYBONOL LVO 100), filter replacement, visual inspection of the subassemblies, cleaning of the pump module and the oil box, electrical safety test, test run including check of the attained ultimate pressure levels.

Ordering Information — **On-site Maintenance (with LEYBONOL LVO 100)**

	Part No.
For pump	
TRIVAC D 4 B	**AS 1160 F**
TRIVAC D 8 B	**AS 1159 F**
TRIVAC D 16 B + BCS with standard gaskets	**AS 1158 F**
TRIVAC D 25 B + BCS with standard gaskets	**AS 1157 F**
TRIVAC D 40/65 B + BCS with standard gaskets	**AS 1156 F**

Comprehensive On-site Maintenance (with LEYBONOL LVO 100) [1)]

Comprehensive on-site maintenance includes the following:
Disassembly of the pump, cleaning of all individual components, replacement of all wearing parts, mounting of the pump including new gaskets and standard oil LEYBONOL LVO 100, electrical safety test, test run including check of the attained ultimate pressure levels.

Ordering Information	Comprehensive On-site Maintenance (with LEYBONOL LVO 100) [1)]
	Part No.
For pump	
TRIVAC D 4 B	**AS 1125 F**
TRIVAC D 8 B	**AS 1124 F**
TRIVAC D 16 B	**AS 1121 F**
TRIVAC D 25 B	**AS 1120 F**
TRIVAC D 40 B	**AS 1117 F**
TRIVAC D 65 B	**AS 1116 F**
TRIVAC D 40 BCS with Viton gaskets	**AS 1136 F**
TRIVAC D 65 BCS with Viton gaskets	**AS 1135 F**
TRIVAC D 40 BCS with standard gaskets	**AS 1132 F**
TRIVAC D 65 BCS with standard gaskets	**AS 1131 F**

[1)] Notes on our on-site after sales service

The listed services include the costs for material and working hours on-site for standard TRIVAC pumps. Services for pump variants upon request.
Transportation and travelling expenses are invoiced at cost. All services refer to the repair of freely accessible and not contaminated vacuum components.

As to services for TRIVAC B-DOT, TRIVAC B-Ex and TRIVAC B ^{3}He please ask us for a quotation.

Complete Refurbishing at the Service Center (with LEYBONOL LVO 100)

Complete refurbishing at the service center includes the following:
Disassembly of the pump, visual inspection of the subassemblies, replacement of all wearing parts, machined reworking of the pump module, mounting of the pump including new gaskets and standard oil LEYBONOL LVO 100, electrical safety test, test run including check of the attained ultimate pressure levels.

Ordering Information	Complete Refurbishing at the Service Center (with LEYBONOL LVO 100)
	Part No.
For pump	
TRIVAC D 4 B	**AS 1125**
TRIVAC D 8 B	**AS 1124**
TRIVAC D 16 B	**AS 1121**
TRIVAC D 25 B	**AS 1120**
TRIVAC D 40 B	**AS 1117**
TRIVAC D 65 B	**AS 1116**
TRIVAC D 40 BCS with Viton gaskets	**AS 1136**
TRIVAC D 65 BCS with Viton gaskets	**AS 1135**
TRIVAC D 40 BCS with standard gaskets	**AS 1132**
TRIVAC D 65 BCS with standard gaskets	**AS 1131**

Complete Refurbishing with Decontamination at the Service Center (with LEYBONOL LVO 100)

Complete refurbishing with decontamination at the service center includes the following:
Disassembly of the pump, decontamination of the individual components, visual inspection of the individual subassemblies, replacement of all wearing parts, machined reworking of the pump module, mounting of the pump including new gaskets and standard oil LEYBONOL LVO 100, electrical safety test, test run including check of the attained ultimate pressure levels.

Ordering Information	Complete Refurbishing with Decontamination at the Service Center (with LEYBONOL LVO 100)
	Part No.
For pump	
TRIVAC D 4 B	**AS 1125 D**
TRIVAC D 8 B	**AS 1124 D**
TRIVAC D 16 B	**AS 1121 D**
TRIVAC D 25 B	**AS 1120 D**
TRIVAC D 40 B	**AS 1117 D**
TRIVAC D 65 B	**AS 1116 D**
TRIVAC D 40 BCS with Viton gaskets	**AS 1155 D**
TRIVAC D 65 BCS with Viton gaskets	**AS 1154 D**
TRIVAC D 40 BCS with standard gaskets	**AS 1132 D**
TRIVAC D 65 BCS with standard gaskets	**AS 1131 D**

Only available for purchase in North and South America

60 Hz Curves

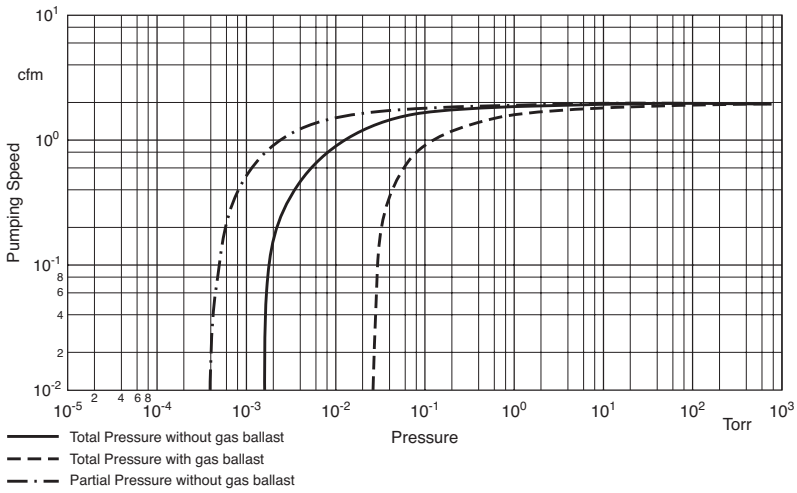

Pumping speed characteristics for the TRIVAC D 2,5 E at 60 Hz

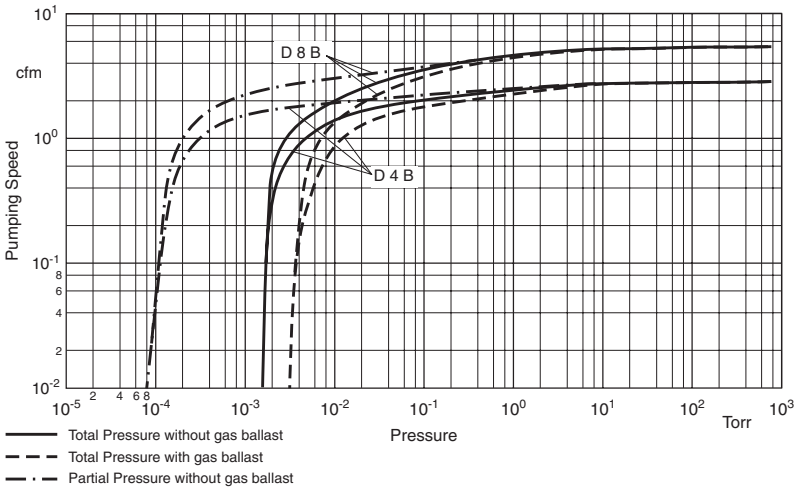

Pumping speed characteristics for the TRIVAC D 4 B and D 8 B at 60 Hz

Only available for purchase in North and South America

60 Hz Curves

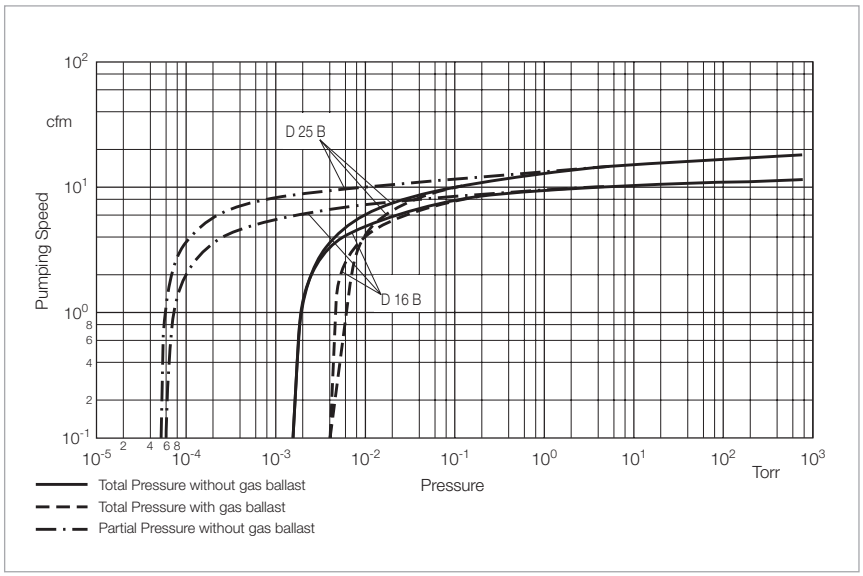

Pumping speed characteristics for the TRIVAC D 16 B/BCS and D 25 B/BCS at 60 Hz

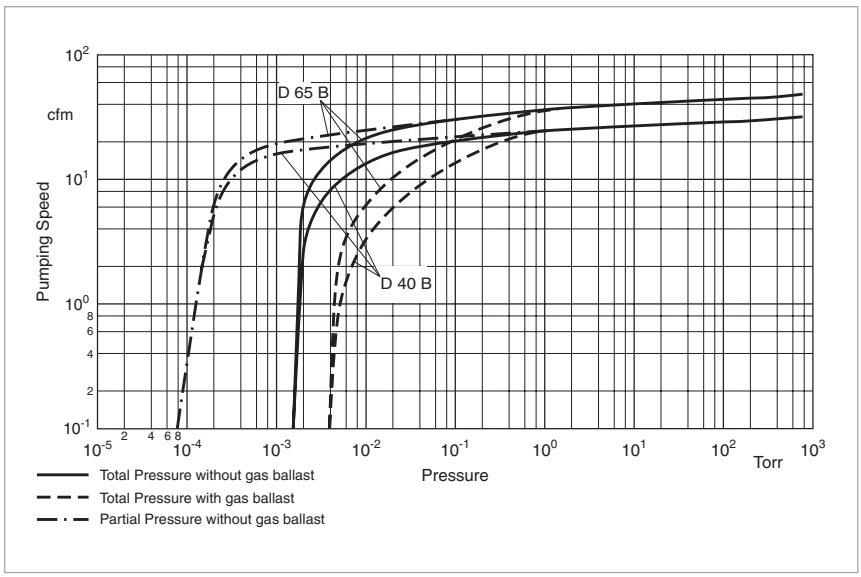

Pumping speed characteristics for the TRIVAC D 40 B/BCS and D 65 B/BCS at 60 Hz

Notes

Applications for SOGEVAC NEO D pumps

Pumps / Applications	SOGEVAC NEO D 16	SOGEVAC NEO D 25	SOGEVAC NEO D 40	SOGEVAC NEO D 65
Vacuum coating	■	■	■	■
Research and development	■	■	■	■
Chemistry / Pharmaceuticals	■	■	■	■
Metallurgy / Furnaces	■	■	■	■
Automotive industry	■	■	■	■
Analytical engineering	■	■	■	■
Cooling and air-conditioning	■	■	■	■
Electrical engineering	■	■	■	■
Medicine technology	■	■	■	■
Glove Boxes	■	■	■	■
Sterilisation	■	■	■	■
Freeze drying systems	■	■	■	■
Backing pump for high vacuum pump systems	■	■	■	■
Leak testing	■	■	■	■
Resin degassing / Composites	■	■	■	■

The table only lists general applications. Your specific requirements might be subject to deeper analysis. For further questions, please contact our technical Sales support.

Oil for SOGEVAC NEO D pumps for different fields of application

Applications	Vacuum coating	Research and development	Chemistry / Pharmaceutical	Metallurgy / Furnaces	Automotive industry	Analytical engineering	Cooling and air-conditioning	Electrical engineering	Medicine technology	Glove boxes	Sterilisation	Freeze drying systems	Backing pump for HV pump systems	Leak testing	Resin degassing / Composites
LEYBONOL Oils															
LVO 120 Mineral		■		■	■			■		■			■	■	
LVO 140 Food grade												■			
LVO 420 PFPE	■	■	■			■							■		
LVO 700 Long life	■	■	■			■	■		■	■	■	■	■		■

These oils can be used in all SOGEVAC NEO D sizes.

Other oils from the LEYBONOL Catalogue can be used as well, please contact our technical Sales support.
Depending of the chosen oil type different technical data may be applicable.
Technical information is valid for LVO 120, LVO 140, LVO 700 when the pump is in warm condition.

Pumps in LVO 420 may have different ultimate pressures. Precisions are given in the Sales text.

The table only lists general applications. Your specific requirements might be subject to deeper analysis.
For further questions, please contact our technical Sales support.

For information on oil specifications please refer to Catalog Part "Oils / Greases / Lubricants LEYBONOL®".

Product Range, Features and Design

Oil sealed rotary vane vacuum pumps are being used in all areas of vacuum engineering. They are equally suited for both industrial production and research applications. They are best used to generate medium vacuum or as backing pumps in pump combinations with Roots vacuum pumps or high vacuum pumps.

The double stage SOGEVAC NEO D rotary vane pumps excel also to their low noise levels and smooth operation. Many years of experience in vacuum engineering and the latest developments in pump technology combine in the SOGEVAC NEO D range the capability to adapt to the requirements of both the industry and the environment.

Main Application Examples

- Research and development
- Chemistry / Pharmaceuticals
- Metallurgy / Furnaces
- Analytical engineering
- Cooling and air-conditioning
- Medicine technology
- Glove Boxes
- Sterilisation
- Freeze drying systems
- Backing pump for high vacuum pump systems
- Leak testing
- Resin degassing / Composites

Advantages to the User

- Integrated exhaust filter ! No external accessory required ! Exhaust gas free of oil mists. Oil loss < 1 ppm!
- Continuous operation from atmospheric pressure to ultimate pressure
- Lowest noise and vibration levels on the market!
- Efficient air cooling (standard)
- Low space requirement, easy to install thanks to integrated exhaust filter
- Very Maintenance-friendly due to oil drain valve and easy to change exhaust filter
- Wide range of accessories available
- Wide pump variant range on every size to cover ATEX or oxygen pumping needs!

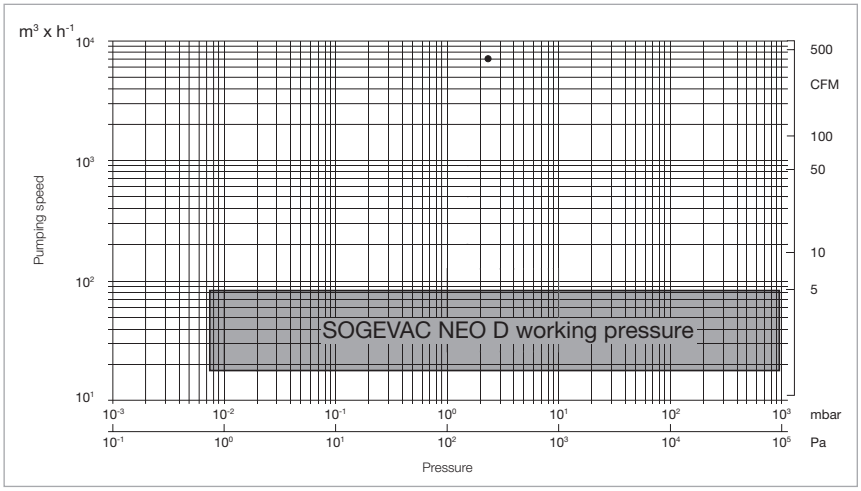

Working pressure of SOGEVAC NEO D pumps

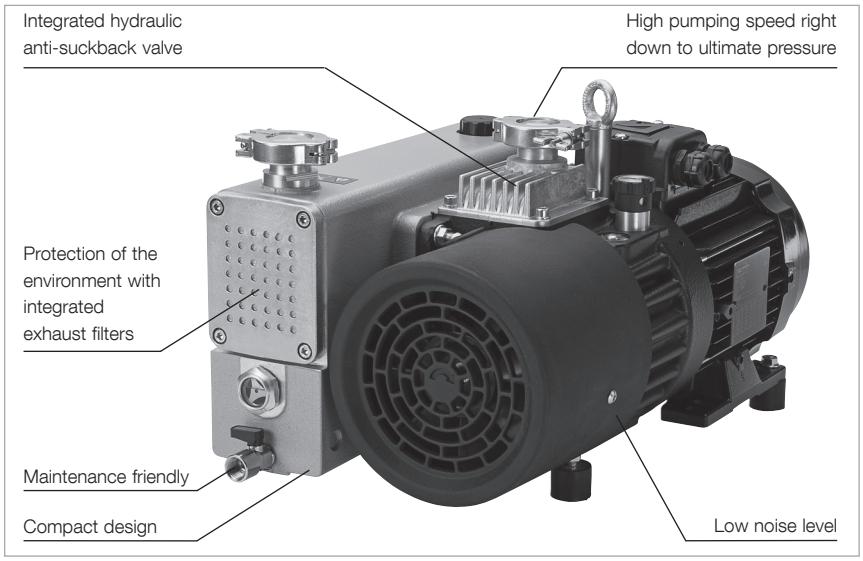

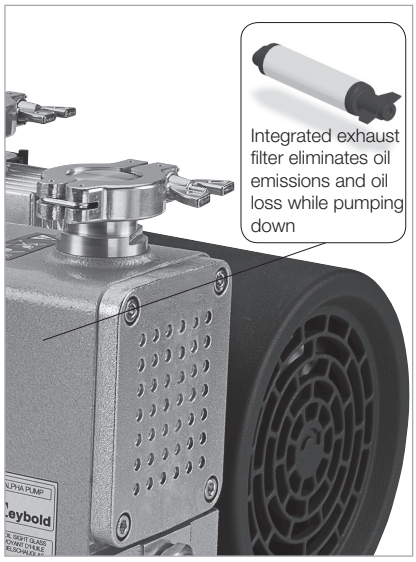

Outstanding features of the SOGEVAC NEO pumps

Design Principle

SOGEVAC NEO D pumps are are double stage oil sealed rotary vane pumps. Oil injected into the pump chamber for sealing, lubrication and cooling of the pump is recycled from the pump's oil reservoir and filtered. The lubrication system is rated for continuous operation at high intake pressures (max. 1000 mbar abs.) so that the pumps may be used in a versatile manner from atmospheric down to ultimate pressure.

The oil carried with the process gas is roughly separated in the oil box before the discharged gas enters the integrated exhaust filters where the fine oil mist is trapped. The thus filtered oil is collected in the oil box and then supplied back to the pump.

The separating system optimized in consideration of all operating conditions for the vacuum pump guarantees – also at high intake pressures and when pumping out of vapors – an exhaust gas which is free of oil mist (separation efficiency over 99.9%).

Materials used in the pump:

Steel, Cast iron, Aluminium, FPM (FKM), Glass, Polyamid 6 6, Filter material (Polymers, Paper), Epoxy resin & Glass fibre.

Pumps are yellow metal free.

Compact Design

The pumps have been so designed that efficiency of the pumps will be highest. The motor and vacuum generator section use the same shaft. All vacuum components like anti-suck back, exhaust filter with oil return line needed for a complete vacuum unit as well as the optimized placement of all controls and monitoring components allow for an extremely compact unit.

Quiet Operation

SOGEVAC NEO D pumps are designed throughout to keep the noise level as low as possible. This is ensured by optimized running and sliding speeds and the selection of low-noise drive motors and fans, as well as perfected manufacturing techniques using CNC automatic machines for optimized tolerances and reproducibility of the individual components.

Anti-Suckback Valve

A valve is built into the intake of the SOGEVAC NEO D pumps. This "anti-suck back valve" (called ASBV) is protected by a metal wiremesh filter. During standstill of the pump (for example due to shutting down or a power failure) the ASBV closes the intake hydraulically & very fast. This prevents the pressure from rising in the connected chamber while the pump is vented at the same time Any suck-back of pump oil into the vacuum system is thus also effectively prevented. This closing process operates under all operating conditions and even when the gas ballast valve is open.

Protection of the Environment

The built-in exhaust filter ensures an oil-mist free exhaust gases over the entire range of operating pressures – from atmospheric pressure to ultimate pressure.

Supplied Equipment

All pumps are delivered with the required quantity of oil, already filled in and are thus ready for operation.

PFPE variants are typically delivered without fluid LVO 420.

Frequency converter drive (optional)

- FC drive enables:
  Speed control
- Monitoring (RS485 interface)
- Constant pumping speed independent of mains frequency
- Soft start w/o inrush current
- Even lower noise and vibration levels than a 1-phase motor
- 1-phase power supply 180 … 264 V at 50 & 60 Hz, for all pump sizes!

Pump failure indicator (optional)

Do you need to keep an eye on the status of your pump, even when you are not on site? Our pump failure indicator enables remote monitoring:

1. **Oil level**
   Indicates a too low oil level
2. **Oil temp**
   Indicates overheating
3. **Exhaust filter condition (back-pressure)**
   Indicates that the exhaust filter needs to be changed

SOGEVAC NEO D 16 / D 25 / D 40 / D 65

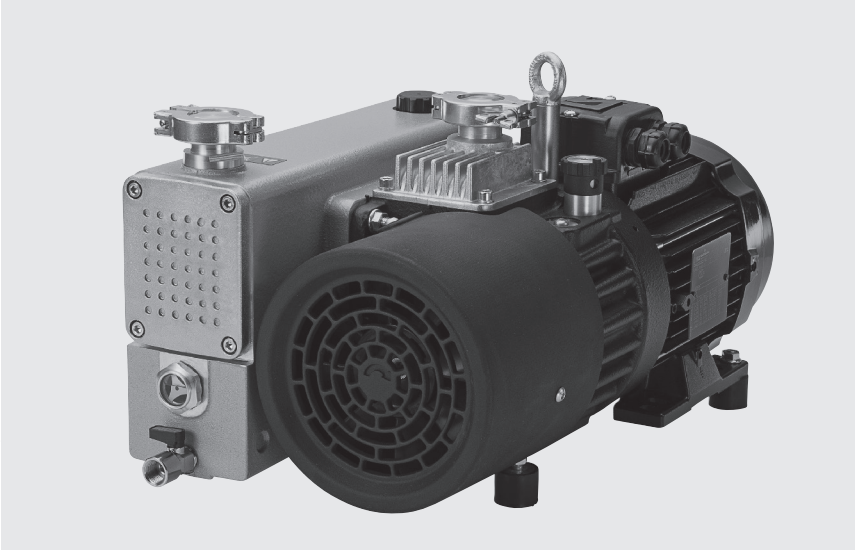

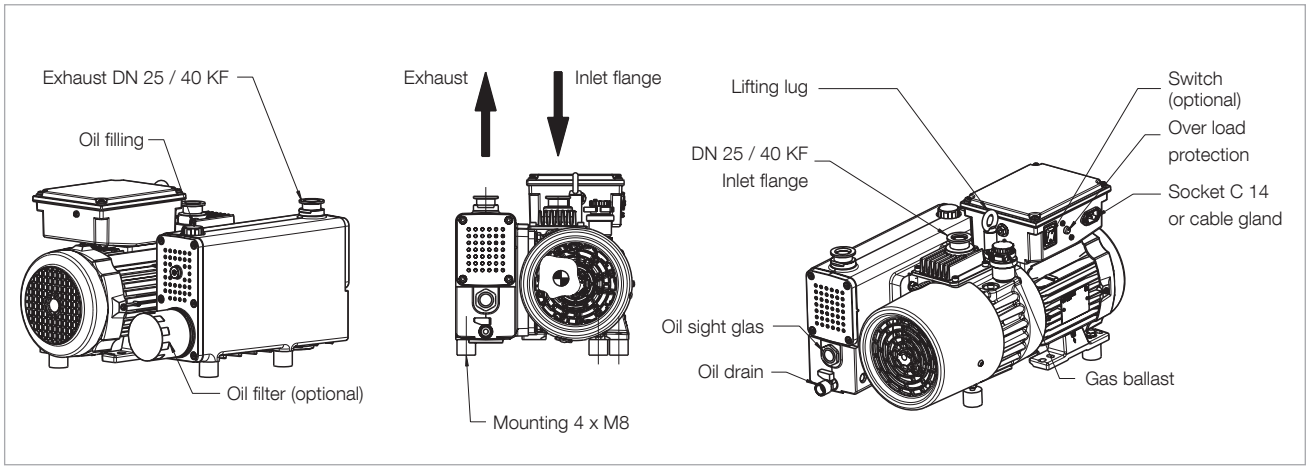

Typical location of main pump components

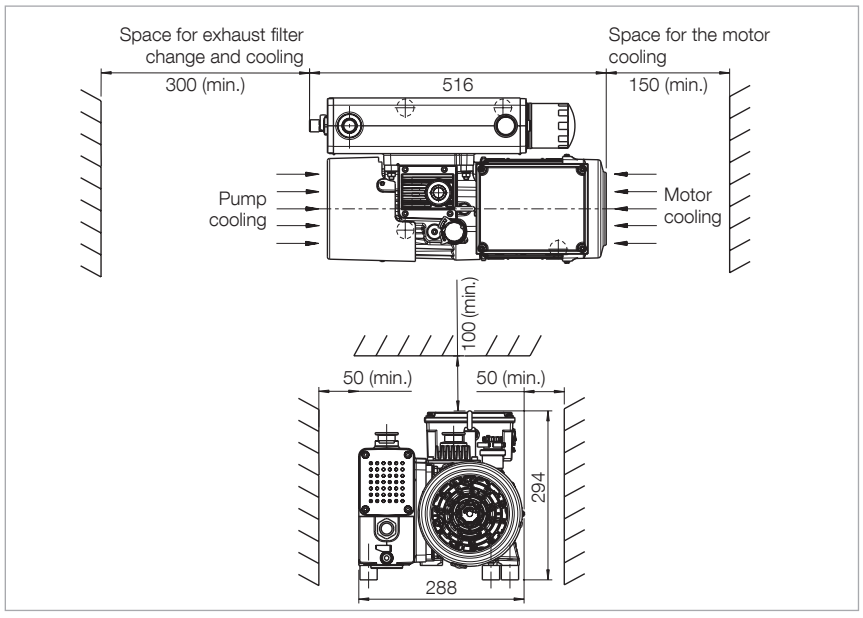

Main installation clearance (in mm)

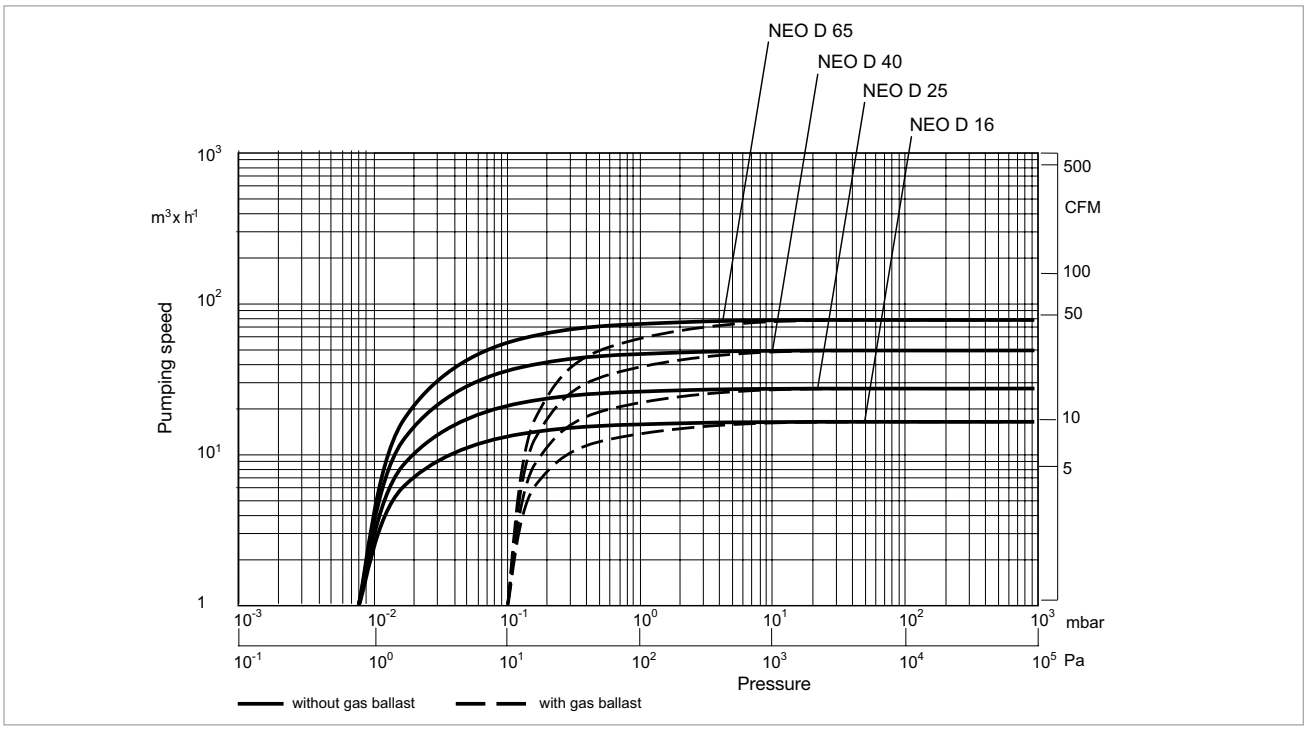

Pumping speed characteristics of the SOGEVAC NEO D 16, D 25, D 40 and D 65 at 50 Hz

Technical Data

		SOGEVAC NEO							
		D 16		D 25		D 40		D 65	
		50 Hz	60 Hz	50 Hz	60 Hz	50 Hz	60 Hz	50 Hz	60 Hz
Nominal speed [1]	m³/h (cfm)	19 (11.18)	23 (13.54)	24 (14.13)	29 (17.07)	40 (23.54)	48 (28.25)	63 (37.08)	76 (44.73)
Pumping speed [1]	m³/h (cfm)	16 (9.42)	19 (11.18)	28 (16.48)	34 (20.01)	47 (27.66)	56 (32.96)	74 (43.55)	89 (52.38)
Ultimate total pressure without gas ballast [1]	mbar (Torr)	$< 8 \times 10^{-3}$ ($< 6 \times 10^{-3}$)							
Ultimate total pressure with gas ballast [1]	mbar (Torr)	$< 1 \times 10^{-1}$ ($< 0.75 \times 10^{-1}$)							
Water vapor tolerance [1]	mbar (Torr)	10 (7.5)							
Oil capacity	l (qt)	1.5 (1.59)				3 (3.17)			
Noise level [2]	dB(A)	54	55	54	55	57	58	57	58
Motor power									
three-phase motor	kW (hp)	0.55 (0.75)	0.70 (0.95)	0.9 (1.22)	1.1 (1.5)	1.15 (1.54)	1.5 (2.04)	2.0 (2.72)	2.6 (3.54)
single-phase motor	kW (hp)	0.75 (1.02)	0.9 (1.22)	0.9 (1.22)	1.1 (1.5)	1.3 (1.77)	1.6 (2.18)	–	–
Frequency converter	kW (hp)	0.75 (1.02)	0.9 (1.22)	0.9 (1.22)	1.1 (1.5)	1.5 (2.04)	1.5 (2.04)	2.0 (2.72)	2.2 (2.99)
Weight	kg (lbs)	48 (106)		48 (106)		80 (176)		88 (194)	
Flanges	DN	25 ISO-KF				40 ISO-KF			
Dimensions (L x W x H) [3]									
three-phase motor	mm	516 x 288 x 294		518 x 288 x 294		632 x 356 x 320		669 x 359 x 320	
	(in.)	(20.32 x 11.34 x 11.57)		(20.39 x 11.34 x 11.57)		(24.88 x 14.02 x 12.60)		(26.34 x 14.13 x 12.60)	
single-phase motor	mm	516 x 288 x 294		518 x 288 x 294		632 x 356 x 320		–	
	(in.)	(20.32 x 11.34 x 11.57)		(20.39 x 11.34 x 11.57)		(24.88 x 14.02 x 12.60)		–	

[1] To DIN 28 400 and following numbers

[2] Operated at the ultimate pressure without gas ballast, free-field measurement at a distance of 1 m (3.5 ft), with LVO 120, LVO 140 or LVO 700 oil

[3] Dimensions may vary in function of mounted accessories or specific motors (e.g. ATEX).

Ordering Information

	SOGEVAC NEO			
	D 16	D 25	D 40	D 65
	Part No.	Part No.	Part No.	Part No.
3-phase world motor [1)] 180…264 / 342…457 V, 50 Hz & 180…264 / 342…506 V, 60 Hz	970102V	970202V	970302V	970402V
3-phase ATEX Cat 2 [1)] 230/400 V, 50 Hz, 460 V, 60 Hz Ex II 2G h IIB 180°C Gb 50Hz / T3 Gb 60Hz (10°C<Ta<40°C) x	upon request	upon request	upon request	upon request
3-phase ATEX Cat 3 [1)] 230/400 V, 50 Hz, 460 V, 60 Hz Ex II (i) 3G h IIC 160°C Gb / (o) 3 GD h IIC T4 (10°C<Ta<40°C) x	970102A33	970202A33	970302A33	970402A33
1-phase [1)] 180 - 264 V, 50 & 60 Hz with overload protection, w/o power cable	970100V C14 socket	970200V C14 socket	970300V C20 socket	–
1-phase [1)] 115 V ± 10%, 60 Hz with overload protection, with NEMA 6-15P power cable	970103V	–	–	–
Accessories [2)]				
External frequency converter for variable speed operation between 40 and 60 Hz and monitoring. Supply voltage 1ph 200-240 V ± 10 %, 50/60 Hz	970FC01			
Roots adapter WA(U) 251/501	–	–	970RA02	970RA01
Oil level switch	9700LS			
Exhaust filter pressure switch	971471210			
Exhaust filter pressure manometer	95193			
Temperature switch sizes 16 / 25 / 40	9700TS			
Temperature switch sizes 65	9700TS65			
PT100 sensor	–		971444320	
Gas ballast				
EM 24 V DC, 0.5 A	9700GBDC			
Permanent	9700GBP			
Permanent with 16 KF	EK6702221			
Manual with 16 KF	9700GBA			

Ordering Information

	SOGEVAC NEO			
	D 16	D 25	D 40	D 65
	Part No.	Part No.	Part No.	Part No.
Spare parts for standard pumps				
Exhaust filter	EK6702228	EK6702158	EK6702490	EK6702425
Oil filter	EK96004			
Maintenance kit [3]	EK9701M	EK9702M	EK9703M	EK9704M
Repair kit [3]	EK9701RES	EK9702RES	EK9703RES	EK9704RES
Seal kit [3]	EK9701SK	EK9702SK	EK9703SK	EK9704SK
Consumables				
Oil				
Long life LVO 700	2 x L70001		3 x L70001	
Mineral LVO 120	2 x L12001		3 x L12001	
PFPE LVO 420	2 x L42001		3 x L42001	
Spare parts for ATEX pumps				
Exhaust filter	EK6703124	EK6703129	EK6703130	EK6703135
Oil filter bypass	71230570			
Maintenance kit	EK9701AM	EK9702AM	EK9703AM	EK9704AM
Repair kit	EK9701ARES	EK9702ARES	EK9703ARES	EK9704ARES
Seal kit	EK9701SK	EK9702SK	EK9703SK	EK9704SK
Consumables				
Oil for ATEX pumps				
Long life LVO 700	2 x L70001		3 x L70001	

[1] Pumps delivered filled in with LVO700 oil

[2] All accessories can be retrofitted.
For the pump inlet accessories (e.g. inlet filters, inlet absorption traps etc.) kindly consult Trivac B Catalogue Section
For the connection fittings, kindly consult the Flanges & Fittings Catalogue Section

[3] Except PFPE

Notes

Applications for SOGEVAC pumps

Pumps / Applications	SOGEVAC SV 10 B	SOGEVAC SV 16 B	SOGEVAC SV 25 B	SOGEVAC SV 16 D(i)	SOGEVAC SV 25 D	SOGEVAC SV 40 B	SOGEVAC SV 65 B	SOGEVAC SV 100 B	SOGEVAC SV 120 B	SOGEVAC SV 200	SOGEVAC SV 300 B / 320 B	SOGEVAC SV 470/570 B	SOGEVAC SV 470/570 BF	SOGEVAC SV 630 B	SOGEVAC SV 630 BF	SOGEVAC SV 750 B/BF	SOGEVAC SV 28 - 120 BI	SOGEVAC SV 40 ATEX
Vacuum coating								■	■	■	■	■	■	■	■	■		
Research and development					■	■											■	
Chemistry / Pharmaceuticals				■			■	■	■	■	■							■
Metallurgy / Furnaces								■	■	■	■	■	■	■	■	■	■	
Lamps and tubes manufacture	■	■	■	■	■	■	■	■									■	
Automotive industry	■	■	■	■	■	■	■	■	■	■	■	■	■	■	■	■		■
Laser engineering	■	■			■	■												
Space simulation										■		■	■	■	■	■	■	
Analytical engineering				■													■	
Environment engineering				■	■	■	■	■	■	■	■							■
Cooling and air-conditioning	■	■	■	■													■	
Electrical engineering				■			■	■	■	■	■	■	■	■	■	■		
Mechanical engineering				■			■	■	■	■	■	■	■	■	■	■		■
Medicine technology		■	■	■	■	■	■	■	■	■	■						■	
Freeze drying systems				■			■	■	■	■	■	■	■	■	■	■	■	
Backing pump for high vacuum pump systems	■	■	■	■			■	■									■	
Food industry	■	■	■	■			■	■	■	■	■	■		■				
Plant engineering	■	■	■	■	■	■	■	■	■	■	■	■	■	■	■	■	■	
Power engineering / District heating				■			■	■	■	■	■							
Cleaning											■	■	■	■	■	■		
Packaging	■	■	■	■			■	■	■	■	■	■	■	■	■	■		

Oil for SOGEVAC pumps for different fields of application

Applications	Vacuum coating	Research and development	Chemistry / Pharmaceutical	Metallurgy / Furnaces	Lamps and tubes manufactures	Automotive industry	Laser technology	Space simulation	Analytical engineering	Environment technologies	Electrical engineering	Mechanical engineering	Medicine technology	Vacuum drying cabinets	Backing pump for HV pump systems	Food industry	Plant engineering	Power engineering/district heating	Packaging	Cleaning
LEYBONOL Oils																				
LVO 120	■	■	■	■	■		■	■	■	■	■	■	■	■	■	■	■	■	■	■
LVO 130	■	■	■	■	■		■	■		■	■	■	■	■	■	■	■	■	■	■
LVO 140												■	■			■				■
LVO 150												■	■			■				■
LVO 200	■	■	■	■	■		■		■	■		■	■					■	■	
LVO 210	■	■	■	■	■		■						■					■	■	
LVO 300			■							■	■	■	■	■	■	■	■		■	■
LVO 400	■	■	■									■			●	■				■
LVO 420									■											
LVO 700/710	■	■	■	■	■		■	■	■	■	■	■	■	■	■	■	■	■	■	■
DOT 4						■														

■ = Standard
● = Possible

The table only lists general applications. Your specific requirements might be subject to deeper analysis. For further questions, please contact our technical Sales support.

For information on oil specifications please refer to Catalog Part "Oils / Greases / Lubricants LEYBONOL®".

Oil for SOGEVAC pumps for different pump types

Pump line	D		A					B / BF					BI	ATEX
Pumps	SV 16 D, SV 25 D	SV 40, SV 65	SV 100	SV 200, SV 200 FP	SV 500, SV 630, SV 750	SV 10 B, SV 16 B/FP	SV 25 B/FP	SV 40 B, SV 45 FP	SV 65 B, SV 100 B, SV 120 B/FP	SV 300 B (FP) to SV 750 B (F)	SV 16 DI to SV 120 BI	SV 40 B category 1(i)/2(o) IIA	SV 40 B category 1(i)/2(o) IIB + H2	SV 40 B to 630 B category 3(i)/3(o)
LEYBONOL Oils														
LVO 120	■	■				■	■	▲ 1)			■			
LVO 130	▲	▲	■	■	■			▲ 2)	■	■				
LVO 140	●	●	●			●	●	▲	▲					
LVO 150			●	●	●		▲	●	●	●				
LVO 200	●	●	●			●	●	▲	▲		●	■		▲
LVO 210	▲ 2)	▲ 2)	●	●	●	▲	▲	●	●	●			■	■
LVO 300	●	●	●	●	▲			●	●	▲				▲
LVO 400	●	●	●	●	●				●	●				● 3)
LVO 420											■			
LVO 700	●					●	●				●			
LVO 710		●	●	●	●			●	●	●		●	●	●
DOT 4		●						●						

■ = Standard
● = Possible
▲ = Please contact Leybold Valence

1) = with single-phase motor
2) = with three-phase motor
3) = ATEX outside only

The table only lists general applications. Your specific requirements might be subject to deeper analysis. For further questions, please contact our technical Sales support.

For information on oil specifications please refer to Catalog Part "Oils / Greases / Lubricants LEYBONOL®".

Product Range, Features and Design

Oil sealed rotary vane vacuum pumps are being used in all areas of vacuum engineering. They are equally suited for both industrial production and research applications. They may be used to generate a rough and medium vacuum or as backing pumps in pump combinations with Roots vacuum pumps or high vacuum pumps. The SOGEVAC pumps excel also to their low noise levels and smooth operation.

Many years of experience in vacuum engineering and the latest developments in pump technology combine in the SOGEVAC range the capability to adapt to the requirements of both the industry and the environment. The comprehensive range (pumping speeds ranging from 10 to 750 $m^3 \times h^{-1}$ (5.9 to 441.4 cfm)) allows every customer to select the right pump for his particular needs.

Application Examples

- Automotive industry
- Food industry
- Furnaces and plants
- Vacuum coating
- Metallurgy
- Power engineering, long-distance energy
- Space simulation
- Laser technology
- Medicinal technology

Advantages to the User

- Continuous operation from atmospheric pressure to ultimate pressure
- High pumping speed also at low pressures
- Low noise level
- Low vibrations
- Integrated exhaust filter, better than 99.9% efficient
- No oil loss owing to the integrated oil return line
- Exhaust gas free of oil mists
- Efficient air cooling (standard)
- Water cooling (optional)
- Low space requirement, easy to install
- Rugged
- Maintenance-friendly
- Compact design
- For direct fitting to Roots pumps from SV 100 B up
- Optimum size-to-performance ratio
- High water vapor tolerance
- For use in various applications
- Wide range of accessories available for adaptation to differing problems

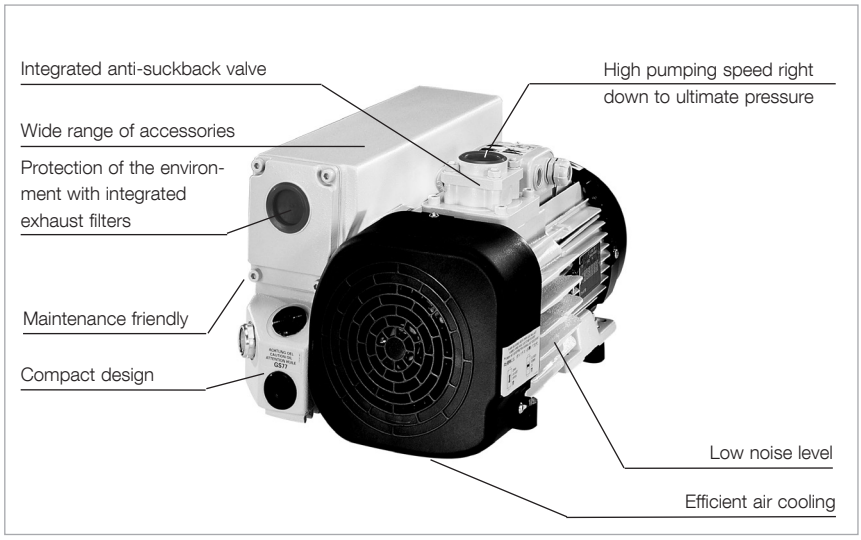

Outstanding features of the SOGEVAC pumps

Design Principle

SOGEVAC pumps are oil sealed rotary vane pumps. Oil injected into the pump chamber for sealing, lubrication and cooling of the pump is recycled from the pump's oil reservoir and filtered, if required, before it is injected. The lubricant system is rated for continuous operation at high intake pressures (max. 1000 mbar abs.) so that the pumps may be used in a versatile manner in most rough vacuum applications (accessories are required for some pumps).

The oil carried with the process gas is roughly separated in the oil box before the discharged gas enters the integrated exhaust filters where the fine oil mist is trapped. The thus filtered oil is collected in the oil box and then supplied back to the pump.

The separating system optimized in consideration of all operating conditions for the vacuum pump guarantees – also at high intake pressures and when pumping out of vapors – an exhaust gas which is free of oil mist (separation efficiency over 99.9%).

Materials used:
Steel, Cast iron, Aluminium, Bronze, FPM (FKM), Glass, Polyamid 6.6, Filter material (Polymers, Paper), Epoxy resin & Glass fibre.

Leybold rotary vane vacuum pumps from the SOGEVAC series excel through numerous special features:

Compact Design

The pumps have been so designed that efficiency of the pumps will be high.

For the SV 10 B through SV 65 B, the motor and pumping section use the same shaft. For the SV 100 B to SV 750 B the motor is linked depending on requirements to the pumping section directly via a coupling or via V-belts as a pedestal motor. All vacuum components like anti-suckback, exhaust filter with oil return line needed for a complete vacuum unit as well as the optimized placement of all controls and monitoring components allow for an extremely compact unit.

Quiet Operation

SOGEVAC pumps are designed throughout to keep the noise level as low as possible. This is ensured by optimized running and sliding speeds and the selection of low-noise drive motors, as well as perfected manufacturing techniques using CNC automatic machines for optimized tolerances and reproducibility of the individual components.

Anti-Suckback Valve

A valve is built into the intake of the SOGEVAC pumps. This "anti-suckback valve" is protected by a metal wire-mesh filter. During standstill of the pump (for example due to shutting down or a power failure) the valve closes the intake. This prevents the pressure from rising in the connected chamber while the pump is vented at the same time. Any suck-back of pump oil into the vacuum system is thus also effectively prevented. This blocking process operates under all operating conditions (below 800 mbar (600 Torr)) and even when the gas ballast valve is open.

Protection of the Environment

The built-in exhaust filter ensures an oil-mist free exhaust gases over the entire range of operating pressures – from atmospheric pressure to ultimate pressure.

Supplied Equipment

All pumps are delivered with the required quantity of oil: SV 10 B to SV 65 B in a separate canister, whereas the SV 100 B and larger pumps already contain the oil and are thus ready for operation.

PFPE variants are typically delivered without fluid LVO 400.

SOGEVAC SV 10 B / SV 16 B

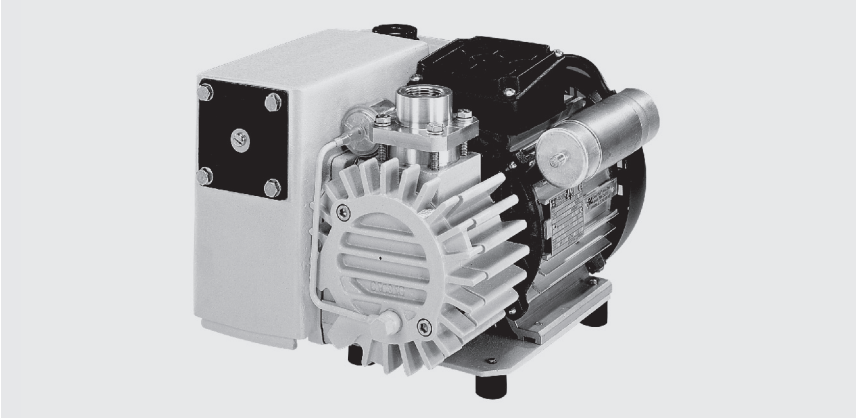

SOGEVAC SV 16 B

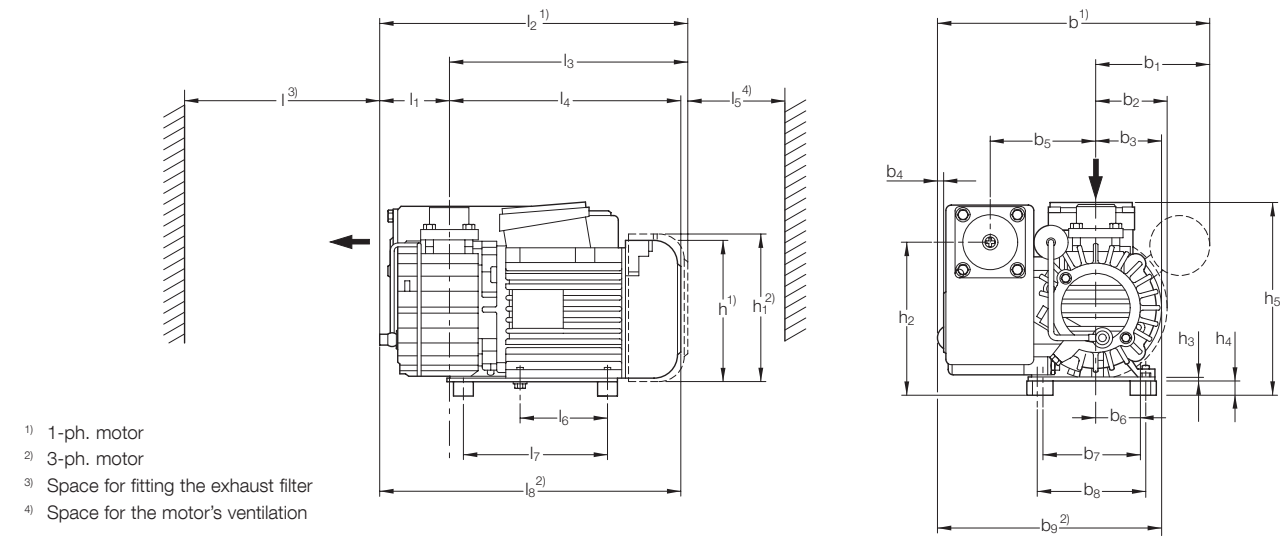

Type		b	b_1	b_2	b_3	b_4	b_5	b_6	b_7	b_8	b_9	h	h_1	h_2	h_3	h_4	h_5	l	l_1	l_2	l_3	l_4	l_5	l_6	l_7	l_8
SV 10 B/16 B	mm	279	117	72	67	7	109	52	100	112	230	142	152	158	4	15	199	200	72	315	244	237	100	90	148	309
	in.	10.98	4.61	2.83	2.64	0.28	4.29	2.05	3.94	4.41	9.06	5.59	5.98	6.22	0.16	0.59	7.83	7.87	2.83	12.4	9.91	9.33	3.94	3.54	5.83	12.17

Dimensional drawing for the SOGEVAC SV 10 B and SV 16 B

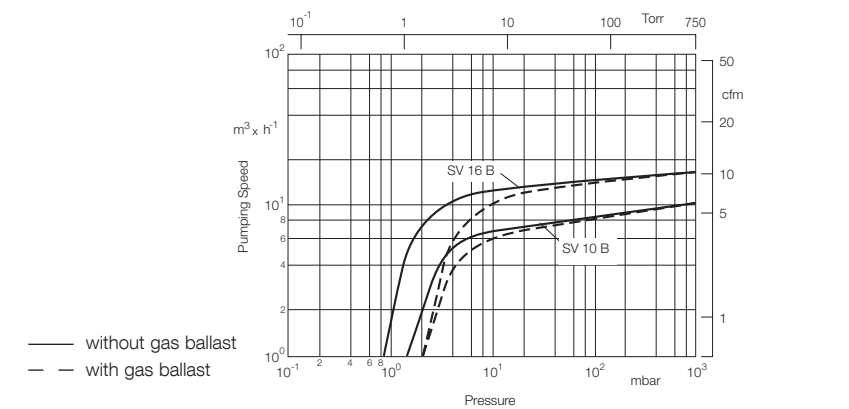

Pumping speed characteristics of the SOGEVAC SV 10 B and SV 16 B at 50 Hz
(60 Hz curves at the end of the chapter)

Technical Data

		SOGEVAC SV 10 B		SOGEVAC SV 16 B	
		50 Hz	60 Hz	50 Hz	60 Hz
Nominal speed [1]	m^3/h (cfm)	11.0 (6.5)	13.0 (7.7)	16.0 (9.4)	19.0 (11.2)
Pumping speed [1]	m^3/h (cfm)	9.5 (5.6)	11.5 (6.8)	15.0 (8.8)	17.0 (10.0)
Ultimate total pressure without gas ballast [1]	mbar (Torr)	≤ 1.5 (≤ 1.1)	≤ 1.5 (≤ 1.1)	≤ 1.0 (≤ 0.8)	≤ 1.0 (≤ 0.8)
Ultimate total pressure with gas ballast [1]	mbar (Torr)	≤ 2.5 (≤ 1.9)	≤ 2.5 (≤ 1.9)	≤ 2.0 (≤ 1.5)	≤ 2.0 (≤ 1.5)
Water vapor tolerance [1]	mbar (Torr)	10.0 (7.5)	15.0 (11.3)	10.0 (7.5)	15.0 (11.3)
Water vapor capacity	g/h (qt/hr)	20 (0.02)	30 (0.03)	30 (0.03)	50 (0.05)
Oil capacity	l (qt)	0.5 (0.53)			
Noise level [2]	dB(A)	62 (1-ph.) – 60 (3-ph.)	66 (1-ph.) – 64 (3-ph.)	62 (1-ph.) – 60 (3-ph.)	66 (1-ph.) – 64 (3-ph.)
Admissible ambient temperature	°C (°F)	12 to 40 (54 to 104)			
Motor power	kW (hp)	0.55 (0.75)	0.75 (1.02)	0.55 (0.75)	0.75 (1.02)
Nominal speed	min^{-1} (rpm)	3000 (3000)	3600 (3600)	3000 (3000)	3600 (3600)
Type of protection	IP	55-F			
Weight (with oil filling)	kg (lbs)	20.0 (41.55)	20.0 (41.55)	20.5 (45.25)	20.5 (45.25)
Dimensions (L x W x H)	mm (in.)	315 x 281 x 199 (12.4 x 11.06 x 7.83)			
Connections intake (Inside thread) [3]	G	3/4" + 1/2"			

Ordering Information

	SOGEVAC SV 10 B		SOGEVAC SV 16 B	
	50 Hz	60 Hz	50 Hz	60 Hz
	Part No.		Part No.	
SOGEVAC SV 10 B/SV 16 B				
with three-phase motor, with permanent gas ballast				
220–240/380–415 V, 50 Hz and 220–266/380–460 V, 60 Hz (CEI)	**960 100**		**960 160**	
200 V, 50/60 Hz	**960 115**		**960 175**	
with single-phase motor [4], with permanent gas ballast				
230 V, 50/60 Hz (CEI)	**960 105**		**960 165**	
110–120 V, 60 Hz	**960 110**		**960 170**	
100 V, 50/60 Hz	**960 114**		**960 174**	
Other voltages/frequencies [5]	**upon request**		**upon request**	
Filling with special oil	**upon request**		**upon request**	
Accessories				
Exhaust filter cartridge AFE SV10B/16B	**714 13 280**		**714 13 280**	
Exhaust connection G 3/4"	**971 433 140**		**971 433 140**	
Spare Parts				
Repair kit	**714 22 230**		**714 22 230**	
Maintenance kit	**971 444 430**		**971 444 430**	
Seal kit FPM (FKM)	**714 22 220**		**714 22 220**	

[1] To DIN 28 400 and following numbers
[2] Operated at the ultimate pressure without gas ballast, free-field measurement at a distance of 1 m (3.5 ft)
[3] 1/2" adapter supplied. Basic port is 3/4"
[4] Single-phase motors do not have plugs, cords or ON/OFF switches
[5] Please indicate when ordering a pump

Materials (materials in contact with the gas) Steel cast iron, Aluminium, Bronze, FPM (FKM), Glass, Polyamid 6.6, Filter material, (Polymers, Paper) Epoxy resin & Glass fibre

Remark: The SV 10 B and SV 16 B cannot work continuously above 150 mbar. Please consult Leybold for this application

SOGEVAC SV 16 D / SV 16 DI / SV 25 D

SOGEVAC SV 16 D / 16 DI / 25 D

Advantages to the User

- Good pump temperature due to optimized air cooling. Add water cooling possible, ideal for harsh applications and optimal oil life time thus reached
- 4 times more oil than on comparable pumps allow long oil life times
- Optimized integrated lubrication without external pipes
- Integrated oil recovery system and anti suckback valve
- Low noise level due to low pump speed
- Variant concept
- 3 phase wide range motors
- Different single phase motors with overload protection in accordance to EN 61010-1
- Compact and nice design

Typical Applications

- Oil purification, drying and de-gassing
- Plastic and rubber injection presses
- CO_2 lasers
- O_2 applications
- Analytical Instruments
- and more ...

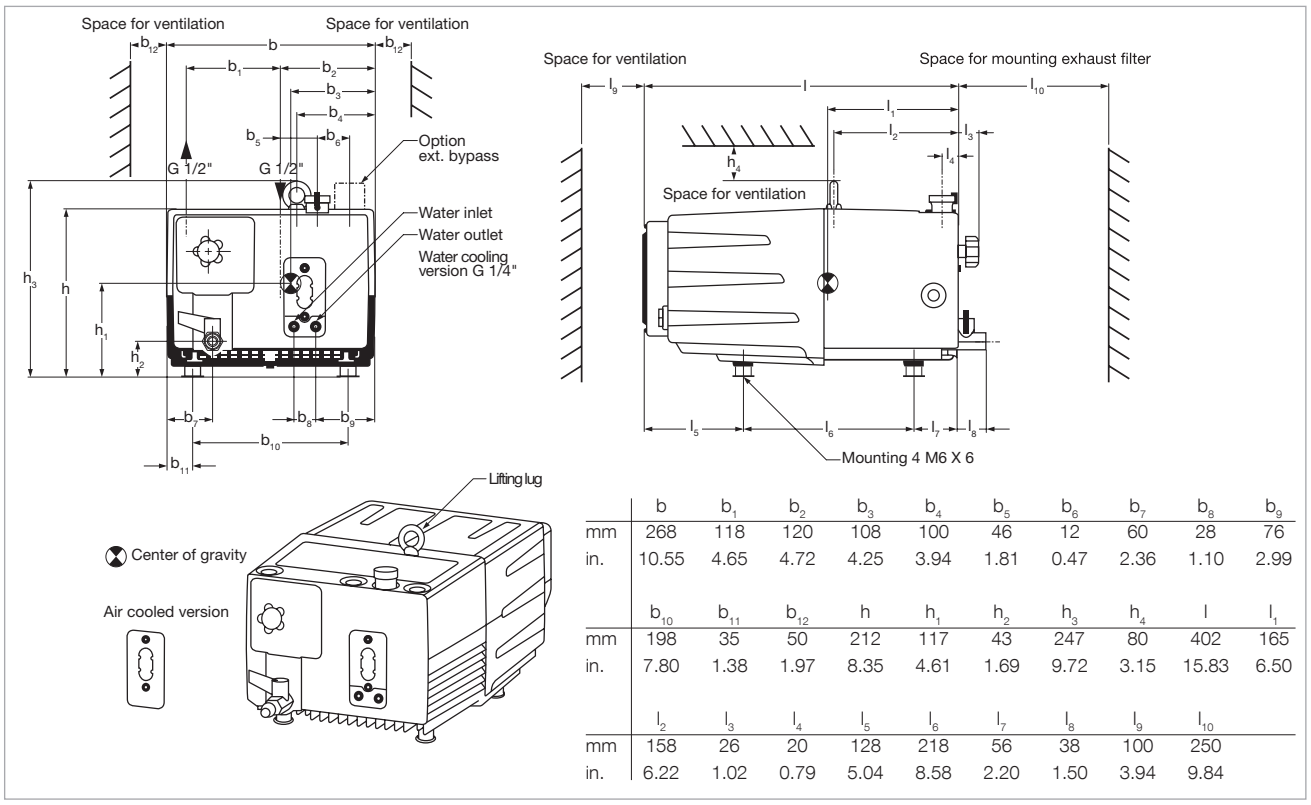

	b	b_1	b_2	b_3	b_4	b_5	b_6	b_7	b_8	b_9
mm	268	118	120	108	100	46	12	60	28	76
in.	10.55	4.65	4.72	4.25	3.94	1.81	0.47	2.36	1.10	2.99

	b_{10}	b_{11}	b_{12}	h	h_1	h_2	h_3	h_4	l	l_1
mm	198	35	50	212	117	43	247	80	402	165
in.	7.80	1.38	1.97	8.35	4.61	1.69	9.72	3.15	15.83	6.50

	l_2	l_3	l_4	l_5	l_6	l_7	l_8	l_9	l_{10}
mm	158	26	20	128	218	56	38	100	250
in.	6.22	1.02	0.79	5.04	8.58	2.20	1.50	3.94	9.84

Dimensional drawing for the SOGEVAC SOGEVAC SV 16 D / 16 DI / 25 D

Technical Data		SOGEVAC SV 16 D		SOGEVAC SV 16 DI		SOGEVAC SV 25 D	
		50 Hz	60 Hz	50 Hz	60 Hz	50 Hz	60 Hz
Nominal speed [1]	m^3/h (cfm)	16.0 (9.4)	18.7 (11.0)	16.0 (9.4)	18.7 (11.0)	25.0 (14.7)	29.0 (17.0)
Pumping speed [1]	m^3/h (cfm)	14.5 (8.5)	17.0 (10.0)	14.5 (8.5)	17.0 (10.0)	22.5 (13.3)	25.5 (15.0)
Ultimate total pressure without gas ballast [1]	mbar (Torr)	≤ 0.5 (≤ 0.4)		≤ 0.1 (≤ 0.08)		≤ 0.5 (≤ 0.4)	
Ultimate total pressure with gas ballast [1]	mbar (Torr)	≤ 1.5 (≤ 1.1)		≤ 1.0 (≤ 0.8)		≤ 1.5 (≤ 1.1)	
Water vapor tolerance [1]	mbar (Torr)	15.0 (11.3)					
Water vapor capacity	kg/h (qt/hr	0.05 (0.05)	0.15 (0.16)	0.05 (0.05)	0.15 (0.16)	0.05 (0.05)	0.15 (0.16)
Oil capacity	l (qt)	2.0 (2.1)					
Noise level [2]	dB(A)	≤ 59					
Admissible ambient temperatur							
1~ (oil: 32 cSt, approx.)	°C (°F)	+18 to +40 (+64 to 104)					
3~	°C (°F)	+12 to +40 (+54 to 104)					
Motor power (1~ and 3~), approx.	kW (hp)	0.75 (1.01)	0.90 (1.21)	0.75 (1.01)	0.90 (1.21)	0.75 (1.01)	0.90 (1.21)
Nominal speed	min^{-1} (rpm)	1440 (1440)	1750 (1750)	1440 (1440)	1750 (1750)	1440 (1440)	1750 (1750)
Weight (with oil filling)	kg (lbs)	25 (55.1)					
Connections, Intake and Exhaust [3]		1/2" NPT/G		25 ISO-KF		1/2“ NPT/G	

[1] To DIN 28 400 ff
[2] Operated at the ultimate pressure without gas ballast, free-field measurement at a distance of 1 m (3.5 ft)
[3] Please indicate when ordering a pump

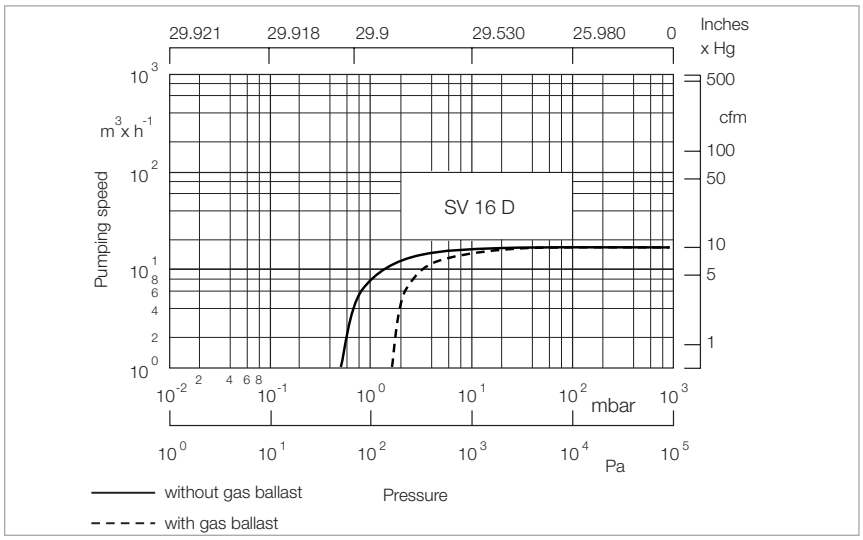

Pumping speed characteristics of the SOGEVAC SV 16 D at 50 Hz
(60 Hz curves at the end of the chapter)

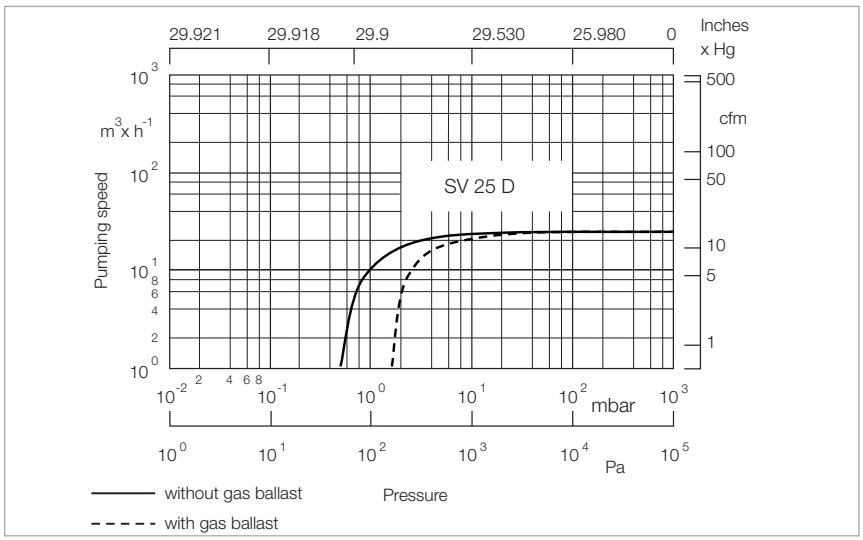

Pumping speed characteristics of the SOGEVAC SV 25 D at 50 Hz
(60 Hz curves at the end of the chapter)

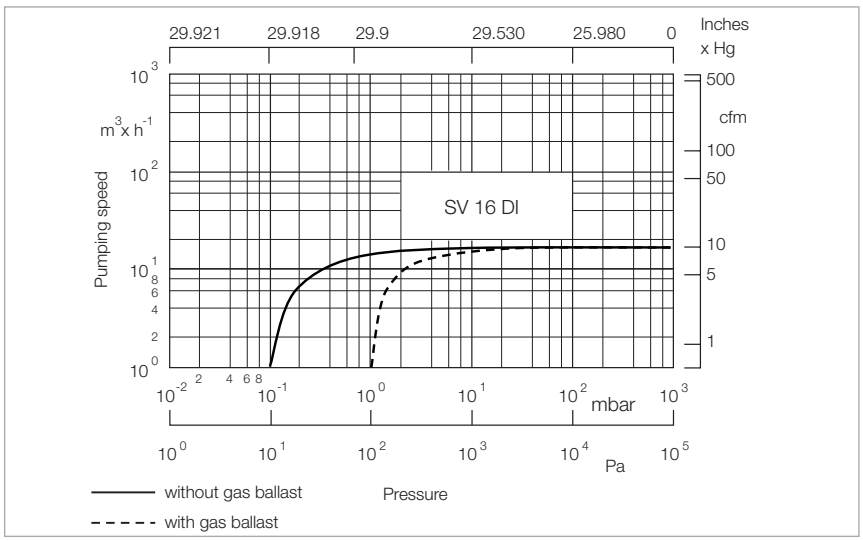

Pumping speed characteristics of the SOGEVAC SV 16 DI at 50 Hz
(60 Hz curves at the end of the chapter)

Ordering Information

	SOGEVAC SV 16 D(I)	SOGEVAC SV 25 D
	Part No.	**Part No.**
SOGEVAC SV 16 D / SV 25 D with UL/CSA world three-phase motor and integrated gas ballast valve 200 – 240 V ±10% and 380 – 415 V ±10%, 50 Hz / 200 – 240 V ±10% and 380 – 460 V ±10%, 60 Hz [1]	**960 181V**	**960 211V**
200 V +10%/-15%, 50/60 Hz	**960 180V**	**960 210V**
with single phase motor and integrated gas ballast valve 200 – 240 V ±10%, 50/60 Hz	**960 185V**	**–**
230 V ±10%, 50/60 Hz	**–**	**960 215V**
100 V -15% and 100 V +10%, 50/60 Hz	**960 184V**	**–**
110 – 115 V ±10% and 220 – 230 V ±10%, 50/60 Hz (switchable manually)	**960 186V**	**–**
Other voltages/frequencies	**upon request**	**upon request**
Filling with special oil	**upon request**	**upon request**
SOGEVAC SV 16 DI with UL/CSA world three-phase motor and integrated gas ballast valve 200 – 240 V ±10% and 380 – 415 V ±10%, 50 Hz / 200 – 240 V ±10% and 380 – 460 V ±10%, 60 Hz [1]	**960 191V3001**	**–**
with single phase motor and integrated gas ballast valve 200 – 240 V ±10%, 50/60 Hz	**960 195V3001**	**–**
100 V -15% and 100 V +10%, 50/60 Hz	**960 194V3001**	**–**
110 – 115 V ±10% and 220 – 230 V ±10%, 50/60 Hz (switchable manually)	**960 196V3001**	**–**
Accessories		
Exhaust filter monitoring gauge, mechanical G 3/4" [2], [3]	**951 93**	**951 93**
Temperature switch conversion kit with plug, for three-phase version only [2], [3]	**upon request**	**upon request**
Spare Parts		
Exhaust filter cartridge AFE	**712 32 023**	**712 32 023**
Maintenance kit (filter, O-Ring, filling plug)	**EK 971 473 420**	**EK 971 473 420**
Seal kit FPM (FKM) SV 16 D / SV 25 D	**EK 971 473 430**	**EK 971 473 430**
Repair kit complete SV 16 D / SV 25 D	**EK 971 473 440**	**EK 971 473 440**

[1] Pumps are delivered in high voltage connection.
For an operation at low voltage, the connections at motor terminal board must be changed
[2] Please indicate when ordering a pump
[3] Can be retrofitted

SOGEVAC SV 25 B

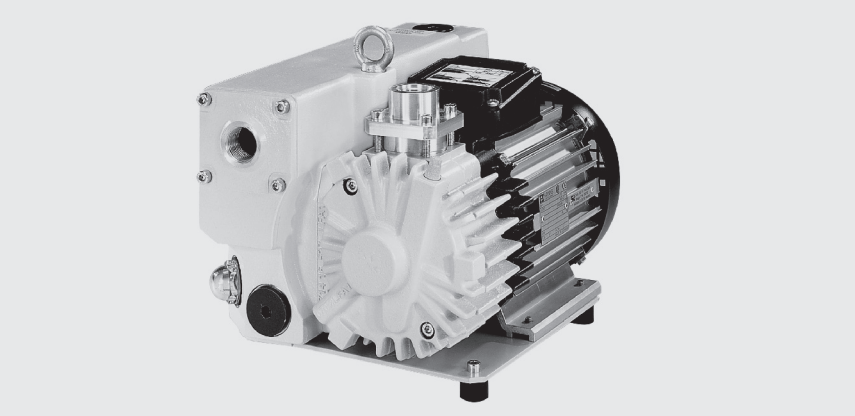

SOGEVAC SV 25 B

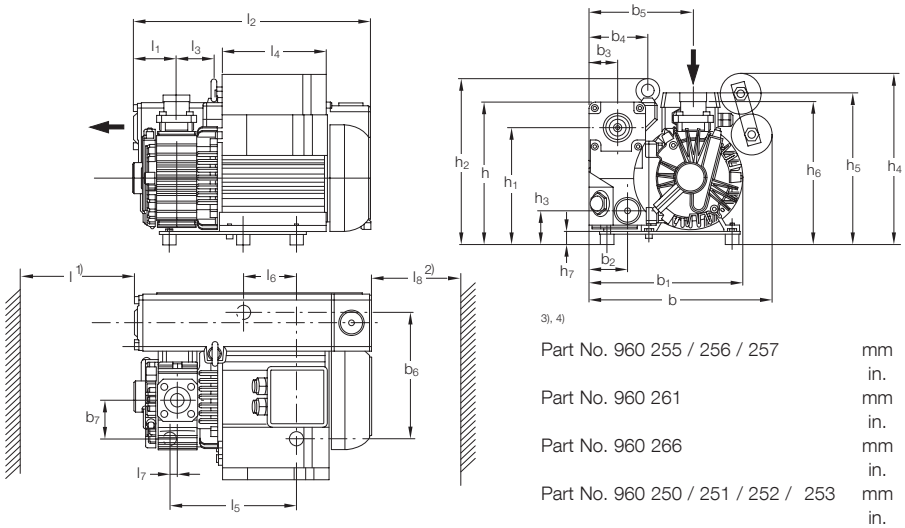

1) Space for fitting the exhaust filter
2) Space for the motor's ventilation

3), 4)

		b	h_4
Part No. 960 255 / 256 / 257	mm	275	193
	in.	10.83	7.60
Part No. 960 261	mm	275	235
	in.	10.83	9.25
Part No. 960 266	mm	275	253
	in.	10.83	9.96
Part No. 960 250 / 251 / 252 / 253	mm	231	–
	in.	9.09	–

Type		b	b_1	b_2	b_3	b_4	b_5	b_6	b_7	h	h_1	h_2	h_3	h_4	h_5	h_6	h_7	l	l_1	l_2	l_3	l_4	l_5	l_6	l_7	l_8
SV 25 B	mm	3)	231	58	44	89	157	187	57	211	173	246	50	4)	224	211	19	280	65	356	56	155	190	80	11	100
	in.	3)	9.09	2.28	1.73	3.50	6.18	7.36	2.24	8.31	6.81	9.69	1.97	4)	8.82	8.31	0.75	11.02	2.56	14.02	2.20	6.10	7.48	3.15	0.43	3.94

Dimensional drawing for the SOGEVAC SV 25 B

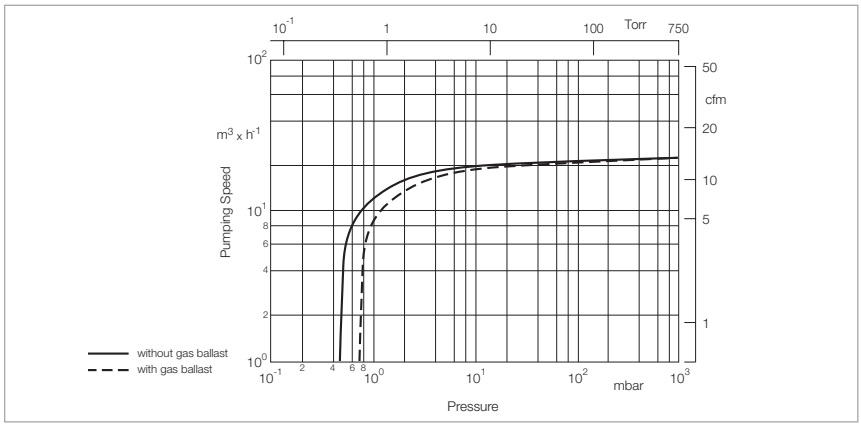

Pumping speed characteristics of the SOGEVAC SV 25 B at 50 Hz
(60 Hz curves at the end of the chapter)

Technical Data

		SOGEVAC SV 25 B	
		50 Hz	60 Hz
Nominal speed [1]	m^3/h (cfm)	26.0 (15.3)	31.0 (18.3)
Pumping speed [1]	m^3/h (cfm)	22.5 (13.3)	25.0 (14.7)
Ultimate total pressure without gas ballast [1]	mbar (Torr)	≤ 0.5 (≤ 0.4)	
Ultimate total pressure with gas ballast [1]	mbar (Torr)	≤ 0.8 (≤ 0.6)	
Water vapor tolerance [1]	mbar (Torr)	10.0 (7.5)	
Water vapor capacity	g/h (qt/hr)	85 (0.09)	100 (0.11)
Oil capacity	l (qt)	0.5 (0.53)	
Noise level [2]	dB(A)	64	67
Admissible ambient temperature	°C (°F)	12 to 40 (54 to 104)	
Motor power	kW (hp)	0.9 (1.2)	1.1 (1.5
Nominal speed	min^{-1} (rpm)	3000 (3000)	3600 (3600)
Type of protection	IP	55-F	
Weight (with oil filling)	kg (lbs)	26 (57.4) [three-phase] 27 (60.0) [single-phase]	
Dimensions (L x W x H)	mm (in.)	356 x 275 x 246 (14.02 x 10.83 x 9.69)	
Connections [3]			
Intake [4]	G or NPT	3/4" + 1/2"	
Exhaust	G or NPT	3/4"	

Ordering Information

	SOGEVAC SV 25 B	
	50 Hz	60 Hz
	Part No.	
SOGEVAC SV 25 B with three-phase motor, without gas ballast 200–240/346–415 V, 50 Hz and 200–277/346–480 V, 60 Hz (CEI)	**960 250**	
200–240/346–415 V, 50 Hz and 200–277/346–480 V, 60 Hz (CEI), NPT flanges	**960 252**	
with three-phase motor, with permanent gas ballast 200–240/346–415 V, 50 Hz and 200–277/346–480 V, 60 Hz (CEI)	**960 251**	
200–240/346–415 V, 50 Hz and 200–277/346–480 V, 60 Hz (CEI), NPT flanges	**960 253**	
with single-phase motor, without gas ballast 230 V, 50/60 Hz (CEI)	**960 255**	
with single-phase motor, with permanent gas ballast 230 V, 50/60 Hz (CEI)	**960 256**	
230 V, 50/60 Hz, NPT flanges (CEI)	**960 257**	
110–120 V, 60 Hz	**upon request**	
100 V, 50/60 Hz	**upon request**	
Other voltages/frequencies [5])	**upon request**	
Filling with special oil	**upon request**	
Accessories		
Exhaust filter cartridge AFE SV25B	**714 16 340**	
Spare Parts		
Maintenance kit	**971 423 450**	
Repair kit	**971 423 100**	
Seal kit FPM (FKM)	**714 19 490**	

[1] To DIN 28 400 and following numbers
[2] Operated at the ultimate pressure without gas ballast, free-field measurement at a distance of 1 m (3.5 ft)
[3] Pumps with European and Japanese motors have G, pumps with NEMA motors have NPT
[4] 1/2" adapter supplied. Basic port is 3/4"
[5] Please indicate when ordering a pump

Materials (materials in contact with the gas) Steel cast iron, Aluminium, Bronze, FPM (FKM), Glass, Polyamid 6.6, Filter material, (Polymers, Paper) Epoxy resin & Glass fibre

SOGEVAC SV 40 B / SV 65 B

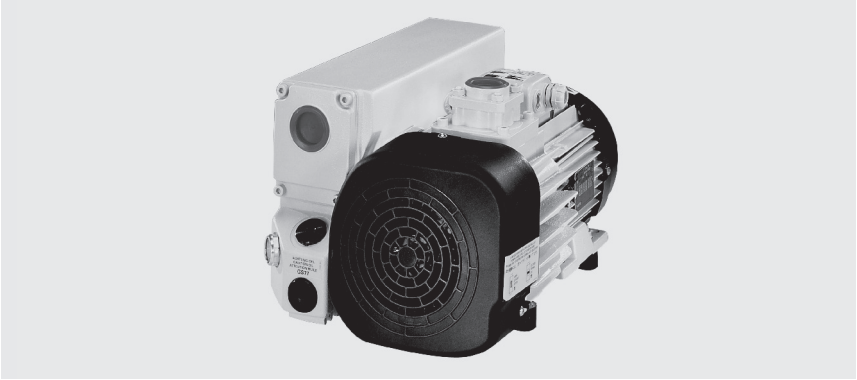

SOGEVAC SV 65 B

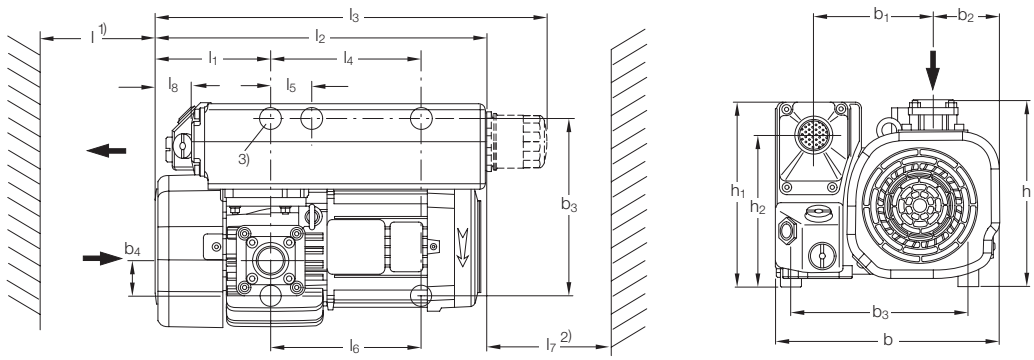

1) Space for fitting the exhaust filter
2) Space for the motor's ventilation
3) Only SV 65 B

Type		b	b_1	b_2	b_3	b_4	h	h_1	h_2	l	l_1	l_2	l_3	l_4	l_5	l_6	l_7	l_8	l_9
SV 40 B	mm	284	160	74	235	46	255	265	217	350	143	425	510	–	40	4)	150	43	425
	in.	11.2	6.3	2.9	9.25	1.8	10.04	10.43	8.54	13.78	6.63	16.7	20.1	–	1.57	4)	5.91	1.69	16.73
SV 65 B	mm	320	170	95	254	50	266	264	216	350	166	480	565	215	–	215	150	52	480
	in.	12.6	6.69	3.74	10.0	1.97	10.47	10.39	8.50	13.78	6.54	18.9	22.2	8.46	–	8.46	5.91	2.05	18.90

4)	l_6
Europe	220
	8.66
US / JPN / TWN	226
	8.89

Dimensional drawing for the SOGEVAC SV 40 B and SV 65 B with standard motor, European version

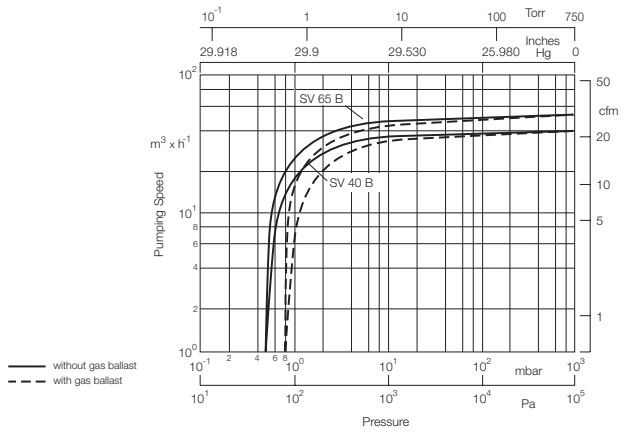

Pumping speed characteristics of the SOGEVAC SV 40 B and SV 65 B at 50 Hz
(60 Hz curves at the end of the chapter)

Technical Data		SOGEVAC SV 40 B		SOGEVAC SV 65 B	
		50 Hz	60 Hz	50 Hz	60 Hz
Nominal speed [1]	m^3/h (cfm)	44.0 (25.9)	53.0 (31.2)	59.0 (34.8)	71.0 (41.8)
Pumping speed [1]	m^3/h (cfm)	38.5 (22.7)	47.0 (27.7)	54.0 (31.8)	64.0 (37.7)
Ultimate total pressure without gas ballast [1]	mbar (Torr)	≤ 0.5 (≤ 0.4)			
Ultimate total pressure [1]					
with standard gas ballast [2]	mbar (Torr)	≤ 1.5 (≤ 1.1)			
with small gas ballast [2]	mbar (Torr)	≤ 0.8 (≤ 0.6)			
Water vapor tolerance [1]					
with standard gas ballast [2]	mbar (Torr)	30.0 (22.5)			
with small gas ballast [2]	mbar (Torr)	10.0 (7.5)			
Water vapor capacity					
with standard gas ballast [2]	kg/h (qt/hr)	0.76 (0.80)	0.90 (0.95)	1.0 (1.1)0,36	1.25 (1.32)
with small gas ballast [2]	kg/h (qt/hr)	0.28 (0.30)	0.34 (0.36)	0.36 (0.38)	0.42 (0.44)
Oil capacity	l l (qt	1.0 (1.05)	1.0 (1.05)	2.0 (2.1)	2.0 (2.1)
Mean noise level [3]	dB(A)	58	60	60	64
Admissible ambient temperature	°C (°F)	12 to 40 (54 to 104)			
Motor power	kW (hp)	1.1 (2.0)	1.5 (2.0)	1.5 (3.0)	1.8 (3.0)
Nominal speed	min^{-1} (rpm)	1500 (1500)	1800 (1800)	1500 (1500)	1800 (1800)
Type of protection	IP	55-F			
Weight (with oil filling)	kg (lbs)	43 (94.9)	45 (99.3)	49 (108.2)	52 (114.8)
Dimensions (L x W x H)	mm (in.)	425 x 284 x 265 (16.7 x 11.2 x 10.4)	425 x 284 x 265 (16.7 x 11.2 x 10.4)	480 x 320 x 264 (18.9 x 12.6 x 10.4)	480 x 320 x 264 (18.9 x 12.6 x 10.4)
Connection (inside thread) [4]					
Intake	G or NPT	1 1/4"			
Exhaust	G or NPT	1 1/4"			

[1] To DIN 28 400 and following numbers
[2] Ordering Information, see next page
[3] Operated at the ultimate pressure without gas ballast, free-field measurement at a distance of 1 m (3.5 ft)
[4] Pumps with European and Japanese motors have G, pumps with US motors have NPT

Materials (materials in contact with the gas) Steel cast iron, Aluminium, Bronze, FPM (FKM), Glass, Polyamid 6.6, Filter material, (Polymers, Paper) Epoxy resin & Glass fibre

Ordering Information

	SOGEVAC SV 40 B 50 Hz 60 Hz	SOGEVAC SV 65 B 50 Hz 60 Hz
	Part No.	**Part No.**
SOGEVAC SV 40 B, SV 65 B [1] with three-phase motor, without gas ballast, without oil filter 230/400 V, 50 Hz and 460 V, 60 Hz (CEI) wide range motor (CEI) [2]	 **960 300** **960 320** [2]	 **960 400** **960 420** [2]
with three-phase motor, without gas ballast, with oil filter 230/400 V, 50 Hz und 460 V, 60 Hz (CEI)	 **960 302**	 **960 402**
with three-phase motor, with small gas ballast, without oil filter 230/400 V, 50 Hz and 460 V, 60 Hz (CEI)	 **960 301**	 **960 401**
230/460 V, 60 Hz and 400 V, 50 Hz, NPT flanges (UL/CSA motor) [3]	 **960 311**	 **960 411**
wide range motor (CEI) [2]	**960 321** [2]	**960 421** [2]
200 V, 50/60 Hz	**960 316**	**960 416**
with three-phase motor, with small gas ballast, with oil filter 230/400 V, 50 Hz and 460 V, 60 Hz (CEI)	 **960 303**	 **960 403**
230/460 V, 60 Hz and 400 V, 50 Hz (CEI), NPT flanges (UL/CSA motor) [3]	 **960 313**	 **960 413**
wide range motor (CEI) [2]	**960 323** [2]	**960 423** [2]
with three-phase motor,, with standard gas ballast, without oil filter 230/400 V, 50 Hz and 460 V, 60 Hz (CEI) 230/460 V, 60 Hz and 400 V, 50 Hz (CEI),	 **960 305**	 **960 405**
NPT flanges (UL/CSA motor) [3] wide range motor (CEI) [2]	**960 312** **960 322** [2]	**960 412** **960 422** [2]
200 V, 50/60 Hz	**960 317**	**960 417**
with three-phase motor, with standard gas ballast, with oil filter 230/400 V, 50 Hz and 460 V, 60 Hz (CEI) 230/460 V, 60 Hz and 400 V, 50 Hz (CEI),	 **960 307**	 **960 407**
NPT flanges (UL/CSA motor) [3] wide range motor (CEI) [2]	**960 314** **960 324** [2]	**960 414** **960 424** [2]
Other voltages/frequencies [4]	**upon request**	**upon request**
Filling with special oil [4]	**upon request**	**upon request**
Accessories		
Exhaust filter cartridge AFE SV40B AFE SV65/100B	 **714 21 180** **-**	 **-** **714 17 300**
Spare Parts		
Maintenance kit	**971 427 660**	**971 423 440**
Repair kit	**971 427 650**	**714 20 420**
Seal kit FPM (FKM)	**971 427 640**	**714 20 410**
Oil filter [5]	**EK 960 04**	**EK 960 04**
Oil filter bypass	**712 30 570**	**712 30 570**

[1] Pumpen mit Europa- und Japan-Motoren in G, Pumpen mit USA-Spannung in NPT
[2] Weitbereichsmotor: 210–240 & 360–420 V ±5 %, 50 Hz und 210–260 & 360–460 V ±5 %, 60 Hz
[3] Mit NEMA-elektrischen Anschlüssen ohne Klemmbrett
[4] Bei Bestellung der Pumpe bitte angeben
[5] Nicht im Wartungssatz enthalten

Notes

SOGEVAC SV 100 B

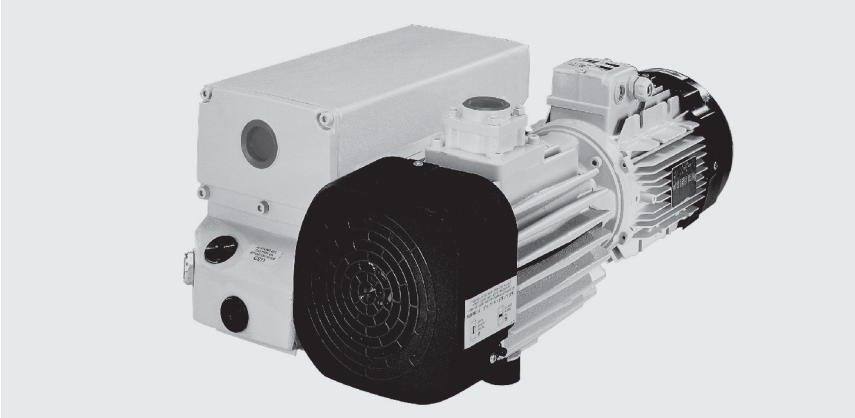

SOGEVAC SV 100 B

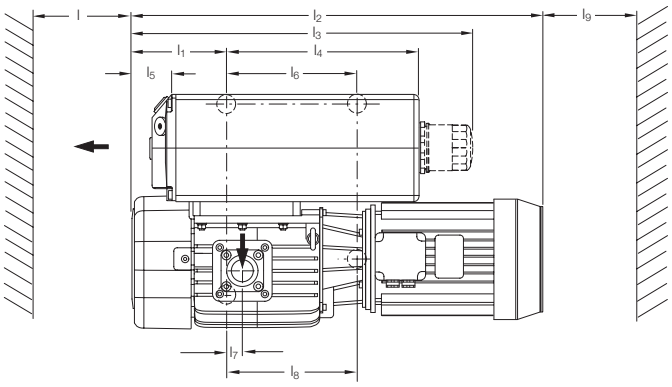

3)		h_4	l_2
Europe	mm	270	775
	in.	10.6	29.7
US	mm	290	775
	in.	11.4	29.7
JPN / TWN	mm	275	775
	in.	10.8	29.7

Type		b_1	b_2	b_3	b_4	b_5	h_1	h_2	h_3	h_4	l	l_1	l_2	l_3	l_4	l_5	l_6	l_7	l_8	l_9
SV 100 B	mm	209	95	258	320	400	271	220	271	3)	350	160	3)	590	330	53	225	27	225	150
	in.	8.23	3.74	10.16	12.60	15.75	10.67	8.66	10.67	3)	13.78	6.30	3)	23.23	12.99	2.09	8.86	1.06	8.86	5.91

Dimensional drawing for the SOGEVAC SV 100 B

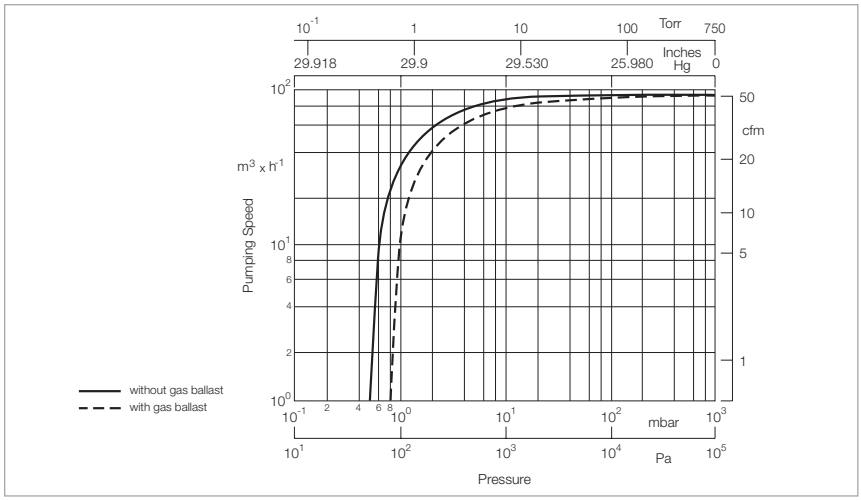

Pumping speed characteristics of the SOGEVAC SV 100 B at 50 Hz
(60 Hz curves at the end of the chapter)

Technical Data

		SOGEVAC SV 100 B	
		50 Hz	60 Hz
Nominal speed [1]	m^3/h (cfm)	97.5 (57.4)	117.0 (68.9)
Pumping speed [1]	m^3/h (cfm)	87.5 (51.5)	105.0 (61.8)
Ultimate total pressure without gas ballast [1]	mbar (Torr)	≤ 0.5 (≤ 0.4)	
Ultimate total pressure [1]			
with standard gas ballast [2]	mbar (Torr)	≤ 1.5 (≤ 1.1)	
with small gas ballast [2]	mbar (Torr)	≤ 0.8 (≤ 0.6)	
Water vapor tolerance [1]			
with standard gas ballast [2]	mbar (Torr)	30.0 (22.5)	
with small gas ballast [2]	mbar (Torr)	10.0 (7.5)	
Water vapor capacity			
with standard gas ballast [2]	kg/h (qt/hr)	1.60 (1.69)	1.70 (1.80)
with small gas ballast [2]	kg/h (qt/hr)	0.45 (0.48)	0.60 (0.63)
Oil capacity	l (qt)	2.0 (2.1)	
Mean noise level [3]	dB(A)	61	64
Admissible ambient temperature	°C (°F)	12 to 40 (54 to 104)	
Motor power	kW (hp)	2.2 (3.5)	3.5 (5.0)
Nominal speed	min^{-1} (rpm)	1500 (1500)	1800 (1800)
Type of protection	IP	55-F	
Materials (materials in contact with the gas)		Steel, cast iron, Aluminium, Bronze, FPM (FKM), Glass, Polyamid 6.6, Filter material (Polymers, Paper), Epoxy resin & Glass fibre	
Weight (with oil filling)	(lbs)	92 (203)	93 (205)
Dimensions (L x W x H)			
Europe	mm (in.)	755 x 400 x 270 (29.7 x 15.7 x 10.6)	
US	mm (in.)	755 x 400 x 290 (29.7 x 15.7 x 11.4)	
JPN / TWN	mm (in.)	755 x 400 x 275 (29.7 x 15.7 x 10.8)	
Connection (inside thread) [4]			
Intake	G or NPT	1 1/4"	
Exhaust	G or NPT	1 1/4"	

[1] To DIN 28 400 and following numbers
[2] Ordering Information, see next page
[3] Operated at the ultimate pressure without gas ballast, free-field measurement at a distance of 1 m (3.5 ft)
[4] Pumps with European and Japanese motors have G, pumps with US (NEMA) motors have NPT

Ordering Information

SOGEVAC SV 100 B

50 Hz 60 Hz

	Part No.
SOGEVAC SV 100 B [1]	
with three-phase motor,	
without gas ballast, without oil filter	
230/400 V, 50 Hz and 460 V, 60 Hz (CEI)	**960 500**
mwith three-phase motor,	
without gas ballast, with oil filter	
230/400 V, 50 Hz and 460 V, 60 Hz (CEI)	**960 502**
with three-phase motor,	
with small gas ballast, without oil filter	
230/400 V, 50 Hz and 460 V, 60 Hz (CEI)	**960 501**
230/460 V, 60 Hz and 400 V, 50 Hz (NEMA)	**960 511**
230/400 V, 50/60 Hz and 460 V, 60 Hz (CEI)	**960 521** [2]
200 V, 50/60 Hz (JIS)	**960 516**
with three-phase motor,	
with small gas ballast, with oil filter	
230/400 V, 50 Hz and 460 V, 60 Hz (CEI)	**960 503**
230/460 V, 60 Hz and 400 V, 50 Hz (NEMA)	**960 513**
230/400 V, 50/60 Hz and 460 V, 60 Hz (CEI)	**960 523** [2]
200 V, 50/60 Hz (JIS)	**960 518**
with three-phase motor,	
with standard gas ballast,without oil filter	
230/400 V, 50 Hz and 460 V, 60 Hz (CEI)	**960 505**
230/460 V, 60 Hz and 400 V, 50 Hz (NEMA)	**960 512**
230/400 V, 50/60 Hz and 460 V, 60 Hz (CEI)	**960 522** [2]
200 V, 50/60 Hz (JIS)	**960 517**
with three-phase motor,	
with standard gas ballast, with oil filter	
230/400 V, 50 Hz and 460 V, 60 Hz (CEI)	**960 507**
230/460 V, 60 Hz and 400 V, 50 Hz (NEMA)	**960 514**
230/400 V, 50/60 Hz and 460 V, 60 Hz (CEI)	**960 524** [2]
200 V, 50/60 Hz (JIS)	**960 519**
Other voltages/frequencies [2]	**upon request**
Filling with special oil [2]	**upon request**
Accessories	
RUVAC adapter (WA/WS 251/501)	**971 448 740**
Exhaust filter cartridge AFE SV65/100B [3]	**714 17 300**
Spare Parts	
Maintenance kit	**971 427 690**
Repair kit	**971 427 680**
Seal kit FPM (FKM)	**971 427 670**
Oil filter [4]	**EK 960 05**
Oil filter bypass	**712 30 570**

[1] Pumps with European and Japanese motors have G, pumps with US voltages motors have NPT witout terminal board
[2] Please indicate when ordering a pump
[3] 2 cartridges needed per pump
[4] Not included in maintenance kit

Notes

SOGEVAC SV 120 B

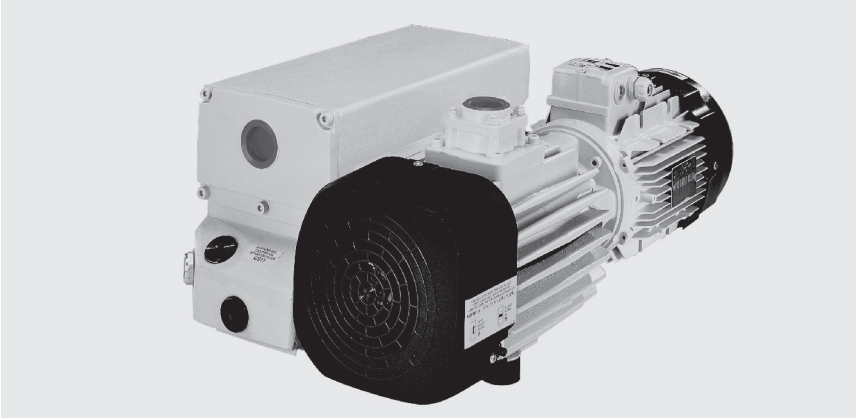

SOGEVAC SV 120 B

Advantages to the User

- Best effective pumping speed in this class
- Good pump temperature due to the cooling coil, ideal for harsh applications. Optimal oil life time thus reached
- Wide range motor as standard
- Optimized integrated lubrication without external pipes
- Integrated oil recovery system and anti suckback valve
- Low noise level

Typical Applications

- Oil purification
- Plastic & rubber injection presses
- Lamination
- ATEX and O_2 applications
- and more ...

[1] Space for fitting the exhaust filter and cooling
[2] Space for the motor's ventilation

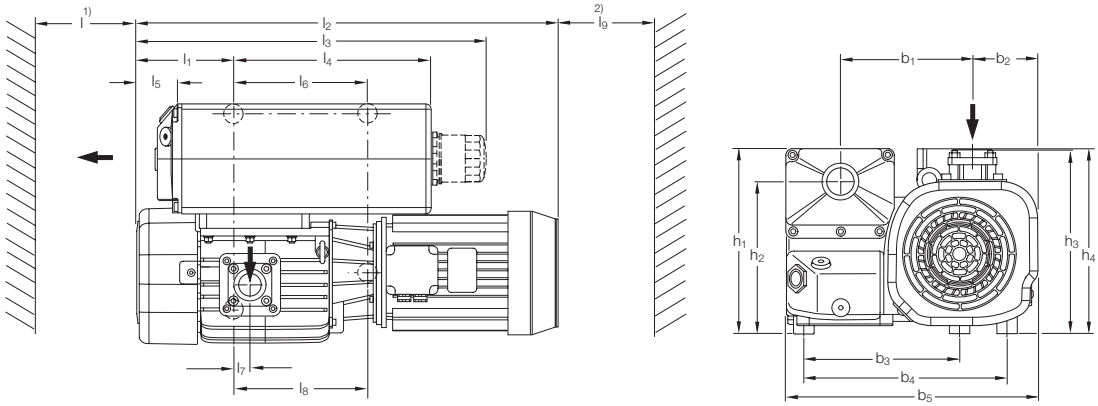

Type		b_1	b_2	b_3	b_4	b_5	h_1	h_2	h_3	h_4	l	l_1	l_2	l_3	l_4	l_5	l_6	l_7	l_8	l_9
SV 120 B	mm	209	95	258	320	460	275	220	271	274	350	160	760	630	330	53	225	27	225	150
	in.	8.23	3.74	10.16	12.60	18.1	10.8	8.66	10.67	10.79	13.78	6.3	30.0	24.8	12.99	2.09	8.86	1.06	8.86	5.91

Dimensional drawing for the SOGEVAC SV 120 B

Technical Data

		SOGEVAC SV 120 B	
		50 Hz	60 Hz
Nominal speed [1]	m^3/h (cfm)	130 (77)	147 (86)
Pumping speed [1]	m^3/h (cfm)	110 (65)	122 (72)
Ultimate total pressure without gas ballast [1]	mbar (Torr)	≤ 0.5 (≤ 0.4)	
Ultimate total pressure [1] with gas ballast [2]	mbar (Torr)	≤ 1.5 (≤ 1.1)	
Water vapor tolerance [1] with standard gas ballast [2]	mbar (Torr)	30.0 (22.5)	
Water vapor capacity with standard gas ballast [2]	kg/h (qt/hr)	1.60 (1.69)	1.70 (1.80)
Mean noise level [3]	dB(A)	61	64
Admissible ambient temperature	°C (°F)	12 to 40 (54 to 104)	
Motor power (with IEC Euro (NEMA) motor)	kW (hp)	2.4 (3.3)	3.2 (4.4)
Mains voltage and frequency 3 ~ motor		220–230 and 380–400 V ±10 %, 50 Hz 230 and 400–460 V ±10 %, 60 Hz	
Nominal speed	min^{-1} (rpm)	1500 (1500)	1800 (1800)
Type of protection	IP	55-F	
Leak rate	mbar x l/s	≤ 1 x 10^{-3}	
Materials (materials in contact with the gas)		Steel, cast iron, Aluminium, Bronze, FPM (FKM), Glass, Polyamid 6.6, Filter material (Polymers, Paper), Epoxy resin & Glass fibre	
Oil capacity	l (qt)	2.0 (2.1)	
Weight (with oil filling)	(lbs)	94 (207)	
Dimensions (L x W x H)	mm (in.)	755 x 400 x 290 (29.7 x 15.7 x 11.4)	
Connection (inside thread) [4]			
Intake	G or NPT	1 1/4"	
Exhaust	G or NPT	1 1/4"	

[1] To DIN 28 400 and following numbers
[2] Ordering Information, see next page
[3] Operated at the ultimate pressure without gas ballast, free-field measurement at a distance of 1 m (3.5 ft)
[4] Pumps with European and Japanese motors have G,
pumps with US (NEMA) motors have NPT

Ordering Information

SOGEVAC SV 120 B

	50 Hz / 60 Hz
	Part No.
SOGEVAC SV 120 B [1]	
with three-phase motor	
230/400 V ±10%, 50 Hz	
and 230/400/460 V ±10%, 60 Hz	
without gas ballast, without oil filter	**960 550 V (upon request)**
with small gas ballast, without oil filter	**960 551**
without gas ballast, with oil filter	**960 552 V (upon request)**
with small gas ballast, with oil filter	**960 553**
with standard gas ballast, without oil filter	**960 572**
with standard gas ballast, with oil filter	**960 557**
Other voltages/frequencies [2]	**upon request**
Filling with special oil [2]	**upon request**
Accessories	
RUVAC adapter (WA/WS 251/501)	**971 448 740**
Exhaust filter cartridge AFE SV65/100B [3]	**714 17 300**
Spare Parts	
Maintenance kit	**971 427 690**
Repair kit	**EK 971 445 151**
Oil filter [4]	**EK 960 05**
Oil filter bypass	**712 30 570**

[1] Pumps with European and Japanese motors have G, pumps with US voltages motors have NPT without terminal board
[2] Please indicate when ordering a pump
[3] 2 cartridges needed per pump
[4] Not included in maintenance kit

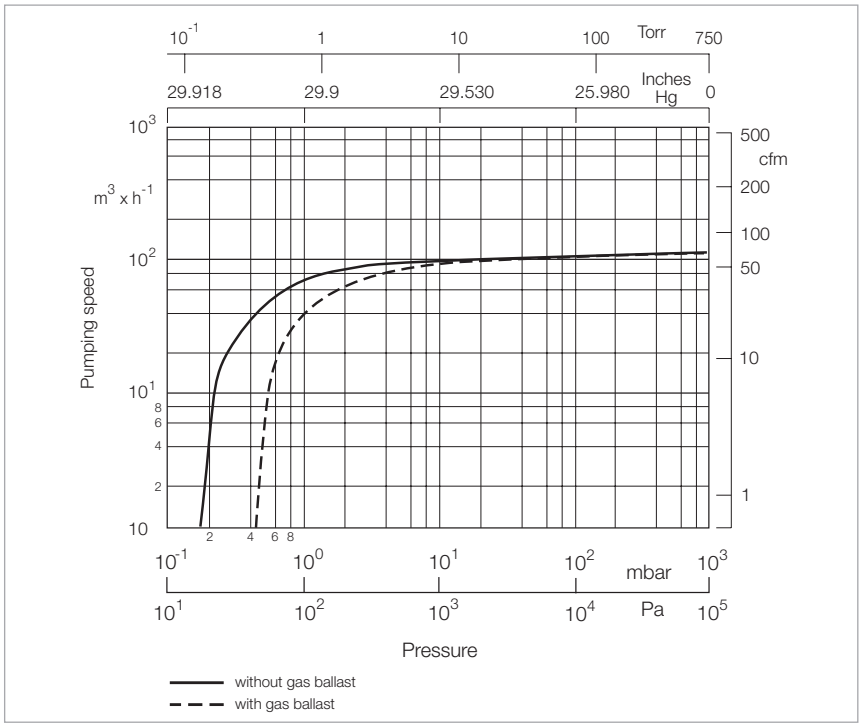

Pumping speed characteristics of the SOGEVAC SV 120 B at 50 Hz
(60 Hz curves at the end of the chapter)

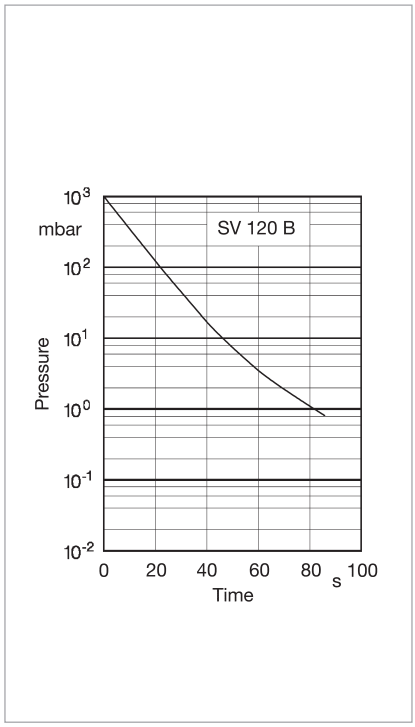

Pump-down characteristics of a 300 l vessel
at 50 Hz

Notes

SOGEVAC SV 200

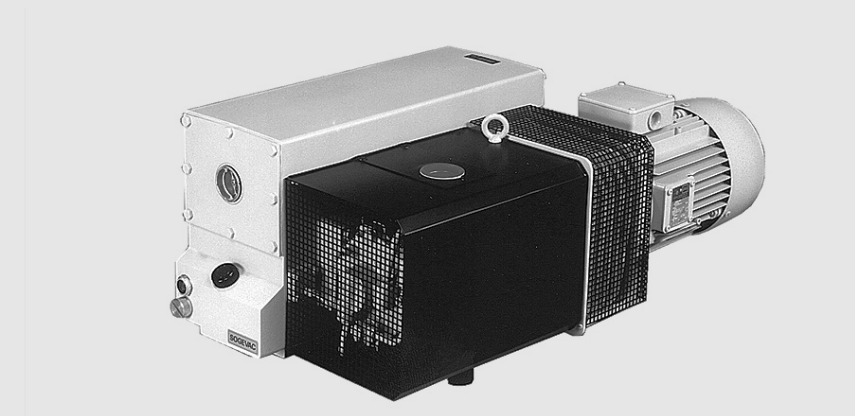

SOGEVAC SV 200

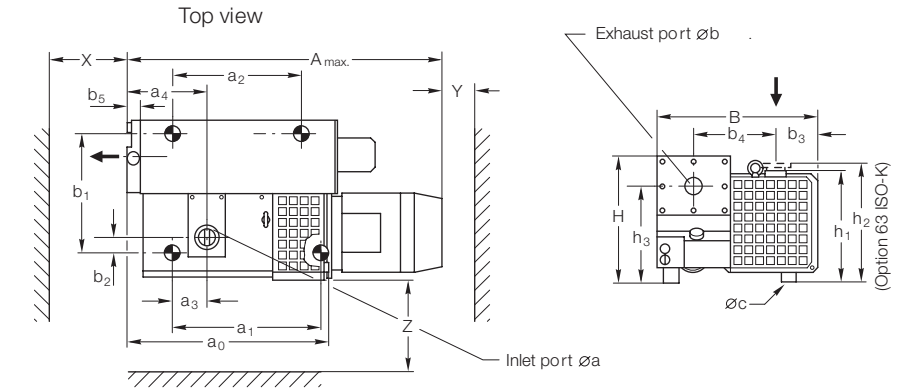

[1]		$A_{max.}$
SV 200, Europe	mm	1070
	in.	42.1
SV 200, US	mm	1070
	in.	42.1
SV 200, wide range	mm	1070
	in.	42.1

Type		ø a (G)	ø b (G)	A_{max}	a_0	a_1	a_2	a_3	a_4	B	b_1	b_2	b_3	b_4	b_5	c	H	h_1	h_2	h_3	X	Y	Z
SV 200	mm	2"	2"	[1]	548	390	252	62	214	535	394	50	140	269	40	M10	425	352	392	318	350	150	300
	in.	2"	2"	[1]	21.57	15.35	9.92	2.44	8.43	21.06	15.51	1.97	5.51	10.59	1.57	M10	16.73	13.86	15.43	12.52	13.78	5.91	11.81

Dimensional drawing for the SOGEVAC SV 200, European version

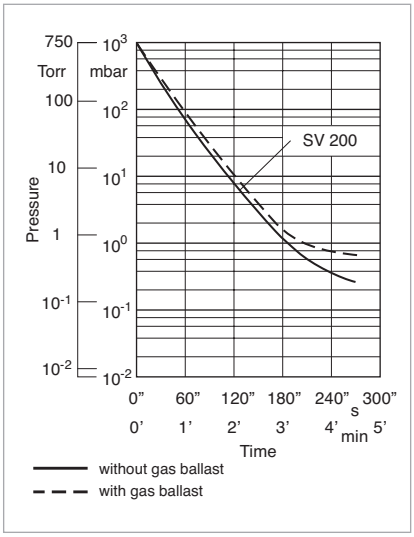

Pump-down characteristics of a 1000 l vessel at 50 Hz

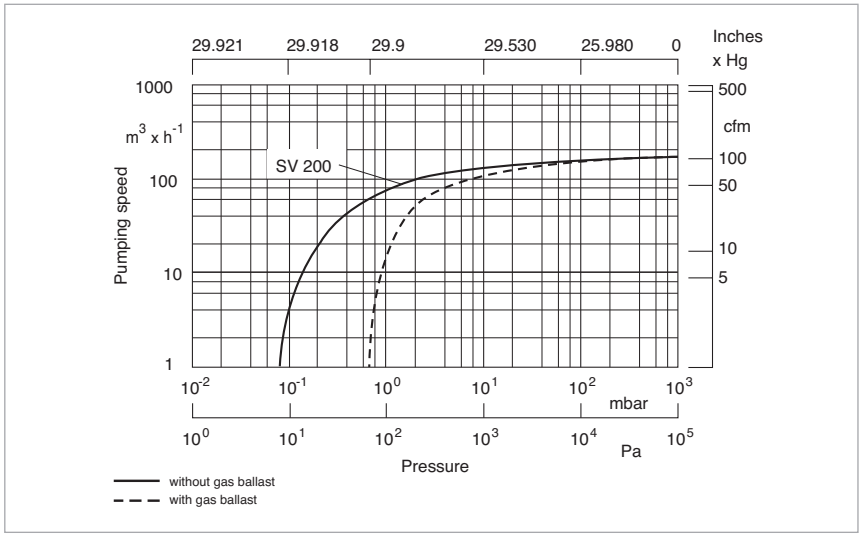

Pumping speed characteristics of the SOGEVAC SV 200 at 50 Hz (60 Hz curves at the end of the chapter)

Technical Data

		SOGEVAC SV 200	
		50 Hz	60 Hz
Nominal speed [1]	m^3/h (cfm)	180 (106.0)	220 (129.5)
Pumping speed [1]	m^3/h (cfm)	170 (100.1)	200 (117.8)
Ultimate total pressure without gas ballast [1]	mbar (Torr)	$\leq 8 \times 10^{-2}$ ($\leq 6 \times 10^{-2}$)	
Ultimate total pressure with gas ballast [1]	mbar (Torr)	≤ 0.7 (≤ 0.5)	
Water vapor tolerance			
with standard gas ballast [1]	mbar (Torr)	30.0 (22.5)	40.0 (30.0)
with big gas ballast [2]	mbar (Torr)	10.0 (7.5)	50.0 (37.5)
Water vapor capacity with standard gas ballast	kg/h (qt/hr)	3.4 (3.6)	5.4 (5.7)
Oil capacity, min. / max.	l (qt)	5.0 (5.3) / 9.0 (9.5)	
Noise level [3]	dB(A)	69	73
Admissible ambient temperature	°C (°F)	12 to 40 (54 to 104)	
Motor power	kW (hp)	4.0 (7.5)	4.6 (7.5)
Nominal speed	min^{-1} (rpm)	1450 (1450)	1750 (1750)
Type of protection	IP	55-F	TEFC/55 [4]
Materials (materials in contact with the gas)		Steel, cast iron, Aluminium, FPM (FKM), Glass, Polyamid 6.6, Filter material (Polymers, Paper), Epoxy resin & Glass fibre	
Weight (with oil filling)	(lbs)	150 (331)	160 (353)
Connection (inside thread) [4]			
Intake	G or NPT	2"	
Exhaust	G or NPT	2"	

[1] To DIN 28 400 and following numbers
[2] Ordering Information see Chapter “Accessories”
[3] Operated at the ultimate pressure without gas ballast, free-field measurement at a distance of 1 m (3.5 ft)
[4] CEI motor (Europe) 50/60 Hz has IP 55, NEMA motor (North and South America) has TEFC
[5] Pumps with European and Japanese motors have G, pumps with US (NEMA) motors have NPT

Ordering Information

SOGEVAC SV 200

	50 Hz	60 Hz
	Part No.	
SOGEVAC SV 200 [1]		
with three-phase motor, without gas ballast		
230/400 V, 50 Hz and 460 V, 60 Hz (CEI) 2)	109 26	
200 V, 50/60 Hz (JIS)	955 26	
with three-phase motor and iintegrated gas ballast valve		
230/400 V, 50 Hz and 460 V, 60 Hz (CEI) 2)	109 27	
208–230/460 V, 60 Hz (NEMA) and [400 V, 50 Hz] 2)	950 27	
200 V, 50/60 Hz (JIS)	955 27	
Other voltages/frequencies [2]	upon request	
Filling with special oil [2]	upon request	
Accessories		
Adaptor for Roots pump [3], [4]		
RUVAC 501 (BR 2)	953 90	
RUVAC 1001 (BR 2)	953 91	
Mounting pedestal for fitting to a Roots pump	711 19 209	
Oil level monitor [3], [4]	953 96	
Thermal switch [3], [4]	951 36	
Exhaust filter gauge, mechanical [3], [4]	951 94	
Exhaust filter monitoring switch, electric [3]	upon request	
Manual gas ballast [3], [4]	951 30	
Gas ballast valve, electromagnetic 24 V DC [3], [4]	951 31	
Two gas ballast valves [3]	upon request	
Water cooling with thermostatic valve [3]	upon request	
Spare Parts		
Oil filter	EK 960 06	
Oil filter bypass	712 30 570	
Exhaust filter cartridge (4x required) AFE SV40-SV100 / SV 180/200	710 64 763	
Set of gaskets NBR (standard)	971 97 552	
Set of gaskets FPM (FKM)	714 36 730	
Repair kit complete	714 36 190	
Pump module complete	714 36 770	

[1] Pumps with European and Japanese motors have G, pumps with US (NEMA) have NPT
[2] IEC motor (Europe) 50/60 Hz have IP 55, NEMA motor have TEFC
[3] Please indicate when ordering a pump
[4] Can be retrofitted

Note: Further pump options upon request (for example, water cooled pumps)

Notes

SOGEVAC SV 300 B and 320 B

SOGEVAC SV 300 B / SV 320 B

Advantages to the User

- SV 320 B provides highest pumping speed on the market
- Lowest pump temperature on the market: ideal for harsh applications. Optimal oil life time thus reached
- Integrated exhaust filters with low oil mist flow: long filter life time
- Optimized integrated lubrication without external pipes: yellow metal free as standard
- Integrated oil recovery system and anti-suckback valve
- Low noise level
- High reliability due to separate greased ball bearings (30.000 h life)
- Variant concept
- Best ultimate pressure
- Big oil volume for long oil life time

Typical Applications

- Coating systems and load locks
- Oil purification
- Plastic & rubber injection presses
- Heat treatment / Metallurgy
- Lamination
- ATEX and O_2 applications
- and more ...

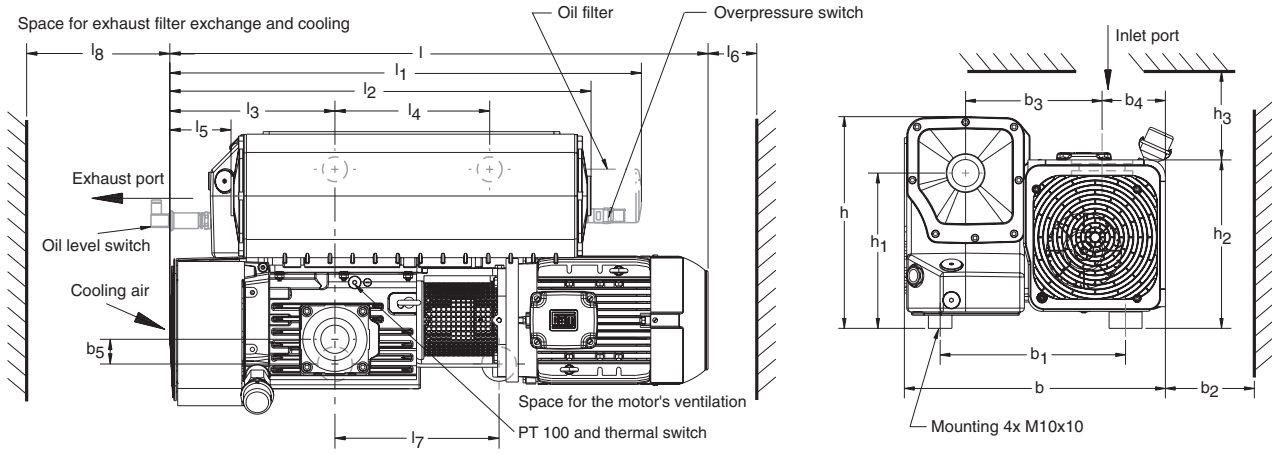

Type		l	l_1	l_2	l_3	l_4	l_5	l_6	l_7	i_8	b	b_1	b_2	b_3	b_4	b_5
SV 300 B	mm	1)	954	852	334	313	124	150	332	350	555	394	250	290	135	50
	in.	1)	37.56	33.54	13.15	12.32	4.88	5.91	13.07	13.78	21.85	15.51	9.84	11.42	5.31	1.97
SV 320 B	mm	1)	955	853	335	313	124	150	332	350	565	394	250	290	144,5	50
	in.	1)	37.50	33.58	13.19	12.32	4.88	5.91	13.07	13.78	22.24	15.51	9.84	11.42	5.69	1.97

Type		h	h_1	h_2	h_3
SV 300 B	mm	450	330	2)	250
	in.	17.72	12.99	2)	9.84
SV 320 B	mm	450	330	2)	250
	in.	17.72	12.99	2)	9.84

SV 300 B/SV 320 B		1)	2)
Europe	mm	1115	360
	in.	43.90	14.17
US	mm	1145	360
	in.	45.10	14.17
Japan	mm	1126	360
	in.	44.33	14.17
Wide Range	mm	1115	385
	in.	43.90	15.16

Dimensional drawing for the SOGEVAC SV 300 B/SV 320 B, European version

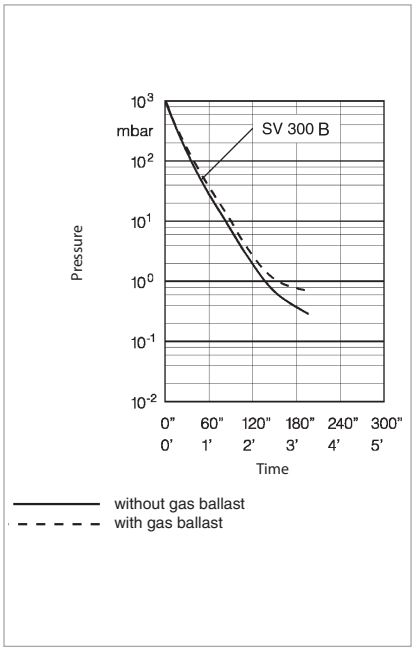

Pump-down characteristics of a 1000 l vessel at 50 Hz

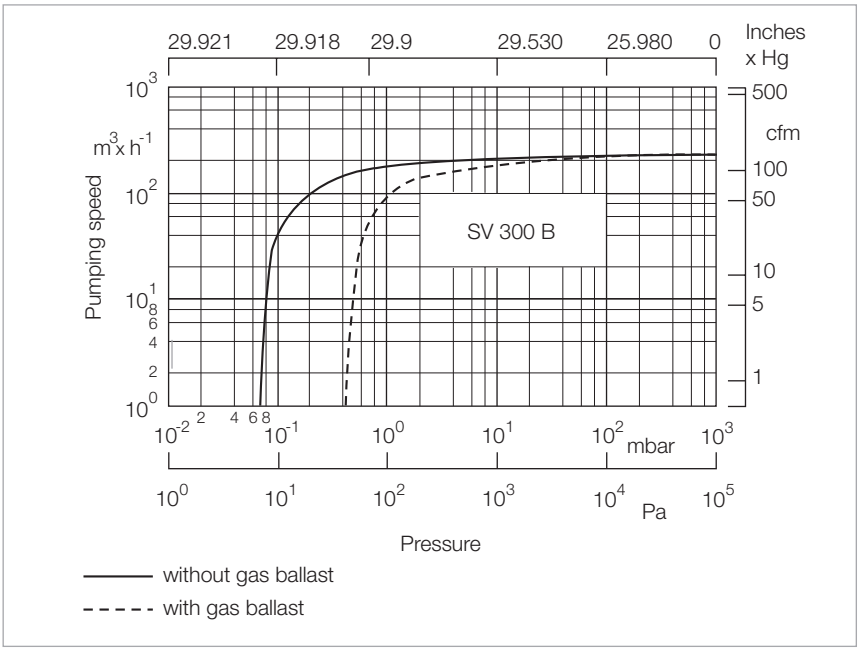

Pumping speed characteristics of the SOGEVAC SV 300 B at 50 Hz (60 Hz curves at the end of the chapter)

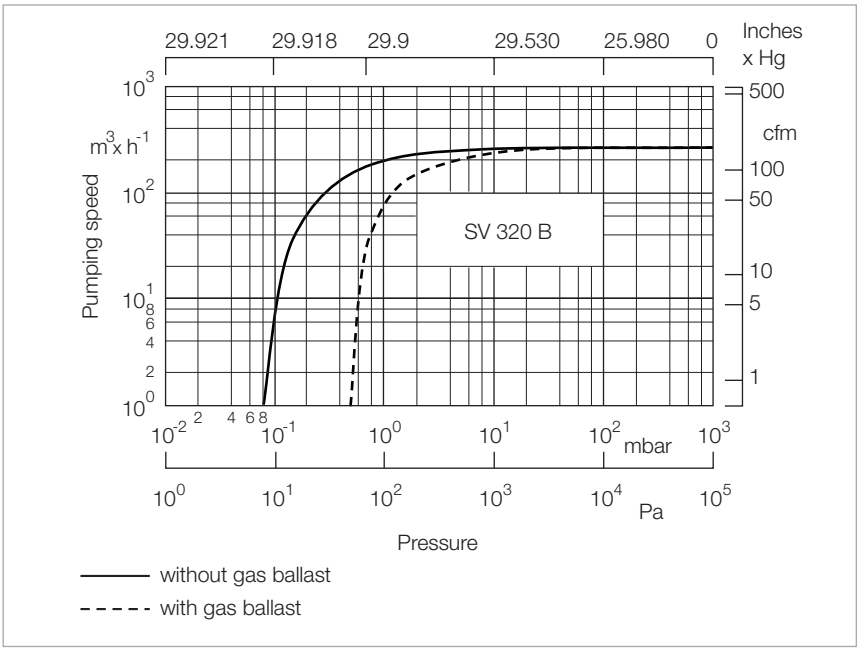

Pumping speed characteristics of the SOGEVAC SV 320 B at 50 Hz (60 Hz curves at the end of the chapter)

Technical Data

		SOGEVAC SV 300 B	
		50 Hz	60 Hz
Nominal speed [1]	m^3/h (cfm)	280 (165)	340 (200)
Pumping speed [1]	m^3/h (cfm)	240 (141)	290 (171)
Ultimate total pressure without gas ballast [1]	mbar (Torr)	≤ 0.08 (≤ 0.06)	
Ultimate total pressure with small gas ballast 4 Nm^3/h [1]	mbar (Torr)	≤ 0.5 (≤ 0.4)	
Ultimate total pressure with standard gas ballast 7.5 Nm^3/h also for electromagnetic gas ballast 10 Nm^3/h [1]	mbar (Torr)	≤ 0.7 (≤ 0.5)	
Ultimate total pressure with big gas ballast 15 Nm^3/h [1]	mbar (Torr)	≤ 2.0 (≤ 1.5)	
Ultimate total pressure with 2 big gas ballasts 28 Nm^3/h [1]	mbar (Torr)	≤ 3.0 (≤ 2.3)	
Water vapor tolerance with small ballast 4 Nm^3/h	mbar (Torr)	4 (3) with turbine 220 mm	5 (4) with turbine 220 mmm
Water vapor capacity with small ballast 4 Nm^3/h	kg/h (qt/hr)	0.4 (0.4) with turbine 220 mm	0.6 (0.6) with turbine 220 mmm
Water vapor tolerance with standard gas ballast 7.5 Nm^3/h also for electromagnetic gas ballast 10 Nm^3/h [2]	mbar (Torr)	10.0 (7.5) with turbine 220 mm 40.0 (30.0) with turbine 150 mm [6]	12.0 (9.0) with turbine 220 mm 50.0 (37.5) with turbine 150 mm [6]
Water vapor capacity with standard gas ballast 7.5 Nm^3/h also for electromagnetic gas ballast 10 Nm^3/h	kg/h (qt/hr)	1.3 (1.4) with turbine 220 mm 6.0 (6.4) with turbine 150 mm [6]	1.8 (1.9) with turbine 220 mm 8.0 (8.5) with turbine 150 mm [6]
Water vapor tolerance with big gas ballast 15 Nm^3/h [2]	mbar (Torr)	70.0 (52.5) with turbine 150 mm [6]	
Water vapor capacity with big gas ballast 15 Nm^3/h [2]	kg/h (qt/hr)	11 (12) with turbine 150 mm [6]	14 (15) with turbine 150 mm [6]
Water vapor tolerance with 2 big gas ballasts 28 Nm^3/h [2]	mbar (Torr)	95 (72) with turbine 150 mm [6]	
Water vapor capacity with 2 big gas ballasts 28 Nm^3/h [2]	kg/h (qt/hr)	15 (16) with turbine 150 mm [6]	17 (18) with turbine 150 mm [6]
Noise level (according to DIN 466535) [3]	dB(A)	72	76
Admissible ambient temperature	°C (°F)	12 to 40 (54 to 104)	
Motor power [4]	kW (hp)	5.5 (7.5)	6.3 (8.6)
Mains voltage and frequency 3 ~ motor	V	see Ordering Information	
Nominal speed	min^{-1} (rpm)	1500 (1500)	1800 (1800)
Type of protection	IP	55	
Isolation class 3 ~ motor		F	
Leak rate	mbar x l/s	≤ 1 x 10^{-3}	
Oil capacity, min. / max.	l (qt)	8.5 (9.0) / 11.5 (12.2)	
Weight (with oil filling)	kg (lbs)	223 (493)	225 (497)
Connections [5]			
Intake, Thread	G or NPT	2"	2"
Exhaust, Thread	G or NPT	2"	2"

[1] To DIN 28 400 and following numbers
[2] Ordering Information see Chapter "Accessories"
[3] Operated at the ultimate pressure without gas ballast, free-field measurement at a distance of 1 m (3.5 ft)
[4] Versions with NEMA motor have 10 hp motors
[5] Pumps with European and Japanese motors have G, pumps with US (NEMA) motors have NPT
[6] Standard turbine 220 mm. Special turbine 150 mm can be retrofitted

Technical Data

		SOGEVAC SV 320 B	
		50 Hz	60 Hz
Nominal speed [1]	m^3/h (cfm)	330 (194)	385 (227)
Pumping speed [1]	m^3/h (cfm)	284 (167)	330 (194)
Ultimate total pressure without gas ballast [1]	mbar (Torr)	≤ 0.08 (≤ 0.06)	≤ 0.08 (≤ 0.06)
Ultimate total pressure with standard gas ballast [1]	mbar (Torr)	≤ 0.7 (≤ 0.05)	≤ 0.7 (≤ 0.05)
Water vapor tolerance with standard gas ballast	mbar (Torr)	10 (7.5)	10 (7.5)
Water vapor capacity with standard gas ballast[1]	kg/h (qt/hr)	1.3 (1.3)	1.8 (1.8)
Noise level (according to DIN 466535) [2]	dB(A)	70	73
Admissible ambient temperature	°C (°F)	+10 to +50 (+50 to +122)	+10 to +50 (+50 to +122)
Motor power	kW (hp)	6.0 (8.0)	7.5 (10.2)
Mains voltage and frequency 3 ~ motor	V	see Ordering Information	see Ordering Information
Weight (with oil filling)	kg (lbs)	211 (465.18)	211 (465.18)
Connections			
Intake, Thread	G	2"	2"
Exhaust, Thread	G	2"	2"

[1] To DIN 28 400 and following numbers

[2] Operated at the ultimate pressure without gas ballast, free-field measurement at a distance of 1 m (3.5 ft)

Ordering Information

SOGEVAC SV 300 B

	50 Hz	60 Hz
	Part No.	
SOGEVAC SV 300 B [1] with oil filter with three-phase motor, without gas ballast, 230/400 V ±10%, 50 Hz and 460 V ±10%, 60 Hz (CEI) [2]	**960 700**	
with small gas ballast, 230/400 V ±10%, 50 Hz and 460 V ±10%, 60 Hz (CEI) [2]	**960 701**	
208 V ±10%, 230/460 V ±10%, 60 Hz and 400 V ±10%, 50 Hz (NEMA) [2]	**960 706**	
200 V +10%/-15%, 50/60 Hz (JIS) [1]	**960 711 V**	
with standard gas ballast, 230/400 V ±10%, 50 Hz and 460 V ±10%, 60 Hz (CEI) [2]	**960 702**	
208 V ±10%, 230/460 V ±10%, 60 Hz and 400 V ±10%, 50 Hz (NEMA) [2]	**960 707**	
200 V +10%/-15%, 50/60 Hz (JIS) [1]	**960 712**	
with big gas ballast, 230/400 V ±10%, 50 Hz and 460 V ±10%, 60 Hz (CEI) [2]	**960 703** [3]	
208 V ±10%, 230/460 V ±10%, 60 Hz and 400 V ±10%, 50 Hz (NEMA) [2]	**960 708** [3]	
200 V +10%/-15%, 50/60 Hz (JIS) [1]	**960 713 V** [3]	
with Wide range motor, 200 V -15% bis 230 V +10% / 380 bis 400 V ±10%, 50 Hz, CTP; 5,5 kW & 200 V -15% bis 230 V +10% / 380 bis 400 V ±10% and 460 V ±10%, 60 Hz, CTP; 6,6 kW with standard gas ballast	**960 717** [4]	
with big gas ballast	**960 718** [3, 4]	

[1] Pumps with European and Japanese motors have G, pumps with US (NEMA) have NPT
[2] IEC motor (Europe) 50/60 Hz have IP 55, NEMA motor have TEFC without terminal board
[3] With small 150 mm turbine
[4] F and P inlet
Full option oil box with connections (bores and plugs) for
- G 3/8“ for external oil filtration
- oil level sensor (vibration)
- thermostatic valve
- temperature sensor Pt100 and switch

Note: Further pump options upon request (for example, water cooled pumps)

Ordering Information

SOGEVAC SV 300 B

	50 Hz	60 Hz
	Part No.	
Accessories		
Adaptor for Roots pump [1), 2)] RUVAC 501 (BR 2) RUVAC 1001 (BR 2)	 971 463 880 971 463 890	
Mounting pedestal for fitting to a Roots pump	971 456 590	
Oil level monitor [1), 3)] (several types are available)	712 21 992V or 971 458 110 (yellow metal free)	
Thermal switch (105 °C) [2), 3)]	971 463 930	
Pt100 sensor [2)]	971 464 020	
Exhaust filter gauge, mechanical [1), 2)]	951 94	
Exhaust filter monitoring switch, electric [1), 3)]	712 22 360	
Manual gas ballast kit[2)] (incl. small, standard and big)	971 464 130	
Gas ballast valve, electromagnetic 24 V DC [1), 2)] with end plate without end plate	 971 465 380 971 465 680	
Two gas ballast valves [1)]	upon request	
Water cooling with thermostatic valve only with all option oil casing [3)]	EK 971 449 111	
Oil filter bypass [1), 2)]	712 30 570	
Spare Parts		
Oil filter	EK 960 06	
Exhaust filter cartridge (3x required) AFE SV 300 B – SV 750 B	971 431 120	
Set of gaskets FPM (FKM) (standard)	971 464 950	
Repair kit	971 464 960	
Maintenance kit	971 464 970	
Generator kit G 2" NPT 2"	 971 447 390 971 458 970	
Turbine 150 mm kit [2), 3)]	EK 650 3 195	

[1)] Please indicate when ordering a pump
[2)] Can be retrofitted
[3)] Can be retrofitted by Leybold Service

Ordering Information

SOGEVAC SV 320 B

50 Hz **60 Hz**

	Part No.
SOGEVAC SV 320 B with three-phase motor IEC, with integrated gas ballast valve, air cooled, mineral oil 230/400 V ±10%, 50 Hz and 460 V ±10%, 60 Hz	**960 722V**
with integrated gas ballast valve, water cooled, mineral oil 230/400 V ±10%, 50 Hz and 460 V ±10%, 60 Hz	**960 722V2002**
with wide range motor, with integrated gas ballast valve, air cooled, mineral oil 200V -15% ... 230V +10% / 380 ... 400 V ±10%, 50Hz und 200V -15% ... 230V +10% / 380 ... 400 V ±10% & 460 ±10%, 60Hz	**960 732V**
with integrated gas ballast valve, water cooled, mineral oil 200V -15% ... 230V +10% / 380 ... 400 V ±10%, 50Hz und 200V -15% ... 230V +10% / 380 ... 400 V ±10% & 460 ±10%, 60Hz	**960 732V2002**
with three-phase motor IEC, with integrated gas ballast valve, air cooled, food grade oil 230/400 V ±10%, 50 Hz and 460 V ±10%, 60 Hz	**960 722FP**
with integrated gas ballast valve, water cooled, food grade oil 230/400 V ±10%, 50 Hz and 460 V ±10%, 60 Hz	**960 722FP2002**
Accessories	
Adaptor for Roots pump [1), 2)] RUVAC 501 (BR 2) RUVAC 1001 (BR 2)	**971 463 880** **971 463 890**
Mounting pedestal for fitting to a Roots pump	**971 456 590**
Oil level monitor [1), 3)] (several types are available)	**712 21 992V or 971 458 110 (yellow metal free)**
Thermal switch (105 °C) [2), 3)]	**971 463 930**
Pt100 sensor [2)]	**971 464 020**
Exhaust filter monitoring switch, mechanical [1), 2)]	**951 94**
Exhaust filter monitoring switch, electric [1), 3)]	**712 22 360**
Manual gas ballast kit[2)] (incl. small, standard and big)	**971 464 130**
Gas ballast valve, electromagnetic 24 V DC [1), 2)] without end plate	**971 465 680**
Oil filter bypass [1), 2)]	**712 30 570**
Spare Parts	
Oil filter	**EK 960 06**
Exhaust filter cartridge (3x required) AFE SV 300 B – SV 750 B	**971 431 120**
Set of gaskets FPM (FKM) (standard)	**EK96022SK**
Repair kit	**EK96072RES**
Maintenance kit	**971 464 970**

[1)] Please indicate when ordering a pump
[2)] Can be retrofitted
[3)] Can be retrofitted by Leybold Service

Notes

SOGEVAC SV 470 B(F) and SV 570 B(F)

SOGEVAC SV 470 B and 570 B

Advantages to the User

- Very low rotational speed increases the lifetime of the pump and leads to noise level reduction
- Extremely low noise level in any working conditions
- Reduced number of oil pipes
- Reduced operational costs
  - Long lifetime of oil and exhaust filters
- Simplified maintenance thanks to an easy access to all key components
- Small size
- Air or water-cooling and many motors and options available
- Competitive price-to-performance ratio
- Adaptors for direct mounting of Roots pumps (RUVAC WH 700 to 2500)
- ATTEX IIC T3 Cat. 3 version internal/ external possible
- PFPE versions available

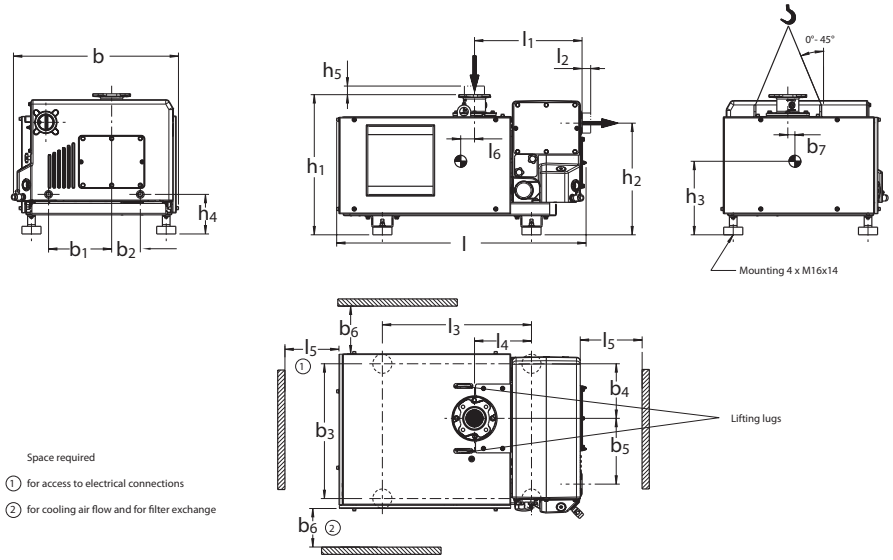

Type		b	b_1	b_2	b_3	b_4	b_5	b_6	b_7	h	h_1
SV 470 B/570 B air cooled	mm	863	350	150	705	286	344	> 800	39	733	584
	in.	33.98	13.78	5.91	27.76	11.26	13.54	31.50	1.54	28.86	22.99
		h_2	h_3	h_4	l	l_1	l_2	l_3	l_4	l_5	l_6
	mm	385	207	450	1305	563	45	780	298	> 800	72
	in.	15.16	8.15	17.72	51.38	22.17	1.77	30.71	11.73	31.50	2.83
		b	b_1	b_2	b_3	b_4	b_5	b_6	b_7	h	h_1
SV 470 B/570 B water cooled	mm	854	350	150	705	286	344	> 800	39	733	584
	in.	33.62	13.78	5.91	27.76	11.26	13.54	31.50	1.54	28.86	22.99
		h_2	h_3	h_4	l	l_1	l_2	l_3	l_4	l_5	l_6
	mm	385	207	450	1305	563	45	780	298	> 800	76
	in.	15.16	8.15	17.72	51.38	22.17	1.77	30.71	11.73	31.50	2.99

Dimensional drawing for the SOGEVAC SV 470 B and 570 B

Technical Data		SOGEVAC SV 470 B(F)		SOGEVAC SV 570 B(F)
		50 Hz	60 Hz	50 Hz
Nominal speed [1]	m^3/h (cfm)	470 (277)	570 (366)	570 (366)
Pumping speed [1]	m^3/h (cfm)	400 (236)	470 (277)	470 (277)
Ultimate total pressure without gas ballast [1]	mbar (Torr)	0,08 (0.06)		
Ultimate total pressure with				
1 gas ballast [1]	mbar (Torr)	(0.5)		
2 gas ballast valves [1]	mbar (Torr)	2.0 (1.5)		
Water vapor tolerance [1]				
1 gas ballast [1], [2]	mbar (Torr)	15.0 (11.0)	20.0 (15.0)	20.0 (15.0)
2 gas ballast valves [1], [2]	mbar (Torr)	40.0 (30.0)	50.0 (38.0)	50.0 (38.0)
Max. water vapor capacity				
1 gas ballast [1], [2]	kg/h (qt/hr)	5.0 (5.3)	7.5 (8.0)	7,5
2 gas ballast valves [1], [2]	kg/h (qt/hr)	13.0 (14.0)	17.0 (18.0)	17.0 (18.0)
Oil filling, min. / max.	l (qt)	20 / 21		
Mean noise level [3]	dB(A)	72	75 (72 for BF pumps)	75 (72 for BF pumps)
Admissible ambient temperature	°C (°F)	12 to 40 (54 to 104)		
Nominal motor speed	min^{-1} (rpm)	820 (820)	1000 (1000)	1000 (1000)
Type of protection	IP	55-F		
Cooling		Air (Water at BF variants)		
Temperature protection				
Pump		yes		
Motor PTC		yes		
Water quality	TH	(4 to 8 at BF variants)		
Water pressure, min. / max.	bar (psig)	(2 to 8 at BF variants)		
Materials (materials in contact with the gas)		Steel, cast iron, Aluminium, FPM (FKM), Glass, Polyamid 6.6, Filter material (Polymers, Paper), Epoxy resin & Glass fibre		
Dimensions (L x W x H)	mm (in.)	1305 x 863 x 733 [4] (51.38 x 33.98 x 28.86)		
Connection [4]				
Intake side Europe / US	G or NPT	3"		
Pressure side Europe / US	G or NPT	3"		

[1] To DIN 28 400 and following numbers, with standard gas ballast

[2] Please ask Leybold for more information about water cooled pumps

[3] Operated at the ultimate pressure without gas ballast, free-field measurement at a distance of 1 m (3.5 ft)

[4] With G 3" flanges. NPT 3" flanges add. 45 mm (1.8 in.) on pump length and height

Additional Technical Data Air Cooling		SOGEVAC SV 470 B(F) 50 Hz	SOGEVAC SV 470 B(F) 60 Hz	SOGEVAC SV 570 B(F) 50 Hz / 60 Hz?
Water vapor tolerance with [1]				
1 gas ballast [1), 2)]	mbar (Torr)	15 (11)	20 (15)	20 (15)
2 gas ballast valves [1), 2)]	mbar (Torr)	40 (30)	50 (37.5)	50 (37.5)
Max. perm. water vapor capacity with				
1 gas ballast [1), 2)]	kg/h (qt/hr)h	5.0 (5.3)	7.5 (8.0)	7.5 (8.0)
2 gas ballast valves [1), 2)]	kg/h (qt/hr)	13.0 (13.8)	17.0 (18.0)	17.0 (18.0)
Mean noise level [3)]	dB(A)	72	75	75

1) To DIN 28 400 and following numbers, with standard gas ballast

2) Please ask Leybold for more information

3) Operated at the ultimate pressure without gas ballast, free-field measurement at a distance of 1 m (3.5 ft)

Additional Technical Data Water Cooling		SOGEVAC SV 470 B(F) 50 Hz	SOGEVAC SV 470 B(F) 60 Hz	SOGEVAC SV 570 B(F) 50 Hz / 60 Hz?
Water vapor tolerance with [1]				
1 gas ballast [1), 2)]	mbar (Torr)	15 (11)	20 (15)	20 (15)
2 gas ballast valves [1), 2)]	mbar (Torr)	35 (26)	40 (30)	40 (30)
Max. perm. water vapor capacity with				
1 gas ballast [1), 2)]	kg/h (qt/hr)	5.0 (5.3)	7.5 (8.0)	7.5 (8.0)
2 gas ballast valves [1), 2)]	kg/h (qt/hr)	11.0 (11.7)	13.0 (13.8)	13.0 (13.8)
Mean noise level [3)]	dB(A)	72		
Thermostatic valve		Pos 3		
Water quality	TH (°F)	4-8		
Water pressure, min. / max.	bar (psi)	2 / 8 (29 / 114)		
Min. water flow for 10 °C (50 °F) water warming	l/h	700	800	800

1) To DIN 28 400 and following numbers, with standard gas ballast

2) Please ask Leybold for more information

3) Operated at the ultimate pressure without gas ballast, free-field measurement at a distance of 1 m (3.5 ft)

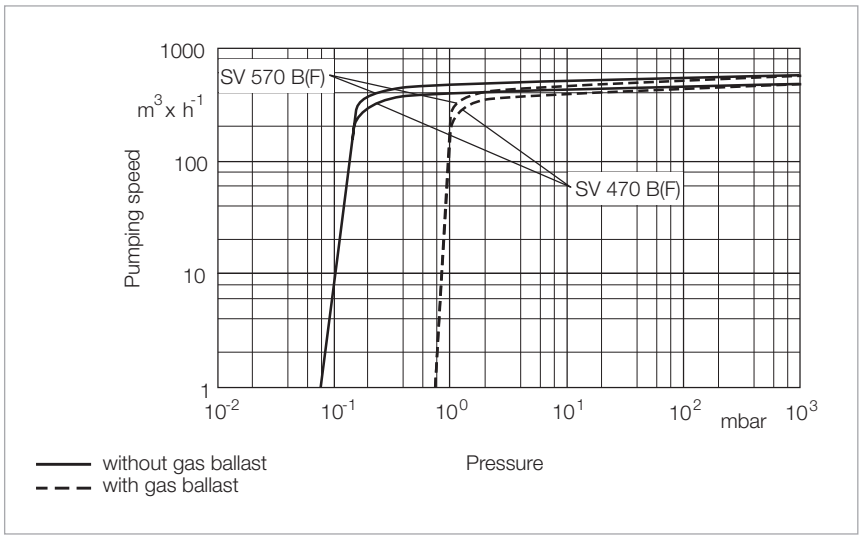

Pumping speed characteristics of the SOGEVAC SV 470 B(F) and 570 B(F) at 50 Hz operation
(60 Hz curves at the end of the chapter)

Ordering Information

	SOGEVAC			
	SV 470 B	SV 470 BF	SV 570 B	SV 570 BF
	Part No.	Part No.	Part No.	Part No.
SOGEVAC SV ... B				
Three-phase Europe motor				
230 V / 400 V, 50 Hz and 460 V, 60 Hz	960 753V	960 757V	–	–
Three-phase Europe motor				
230 V / 400 V, 50 Hz	–	–	960 765V	960 767V
Three-phase world motor				
230 V / 400 V, 50 + 60 Hz / 460 V, 60 Hz	960 754V	960 758V	–	–
230 V / 400 V, 50 Hz	–	–	960 766V	960 768V
NEMA Premium-Version				
400 V ±10%, 50 Hz, 15 hp / 200–230 V ±10%, 60 Hz; 460 V ±10%, 60 Hz, 15 hp with terminal board	–	–	960 755V	960 759V
Accessories				
Adapter for Roots pump				
RUVAC 700	9516 241V	9516 241V	9516 241V	9516 241V
RUVAC 1001	9516 242V	9516 242V	9516 242V	9516 242V
RUVAC 2001	9516 243V	9516 243V	9516 243V	9516 243V
RUVAC WHU 2500	9516 244V	9516 244V	9516 244V	9516 244V
Oil drain valve	Standard	Standard	Standard	Standard
EM gas ballast kit, 24 V DC	971 438 170	971 438 170	971 438 170	971 438 170
Gas ballast standard				
manuell	9516 232V	9516 232V	9516 232V	9516 232V
permanent	9516 233V	9516 233V	9516 233V	9516 233V
2nd gas ballast valve				
EM, 24 V DC	9516 234V	9516 234V	9516 234V	9516 234V
manual	9516 235V	9516 235V	9516 235V	9516 235V
Exhaust filter monitoring gauge	951 94	951 94	951 94	951 94
Oil level check	9516 252V	9516 252V	9516 252V	9516 252V
Temperature switch	Standard	Standard	Standard	Standard
Water cooling with thermostatic valve	Upon request	Upon request	Upon request	Upon request
Exhaust filter overpressure switch	712 22 360	712 22 360	712 22 360	712 22 360
Oil filter bypass	712 36 390	712 36 390	712 36 390	712 36 390
Spare Parts				
Oil filter, standard	EK 960 08	EK 960 08	EK 960 08	EK 960 08
Exhaust filter AFE SV630/SV750B/SV300B (5 pieces are required)	971 431 120	971 431 120	971 431 120	971 431 120
Intake filter element				
Paper	710 35 242	710 35 242	710 35 242	710 35 242
Metal	E 710 37 734	E 710 37 734	E 710 37 734	E 710 37 734
Activated charcoal	710 37 724	710 37 724	710 37 724	710 37 724
Polyester	712 61 508	712 61 508	712 61 508	712 61 508
Seal kit FPM (FKM)	EK971474010	EK971474010	EK971474010	EK971474010
Repair kit, complete	EK96075RES	EK96075RES	EK96075RES	EK96075RES
Generator kit	EK6700666	EK6700666	EK6700666	EK6700666
Maintenance kit	EK6702232	EK6702232	EK6702232	EK6702232

SOGEVAC SV 630 B/630 BF/750 B/750 BF

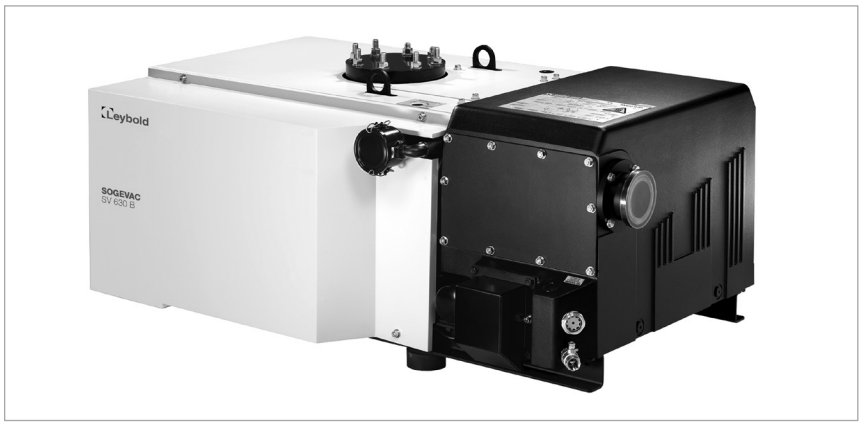

SOGEVAC SV 630 B

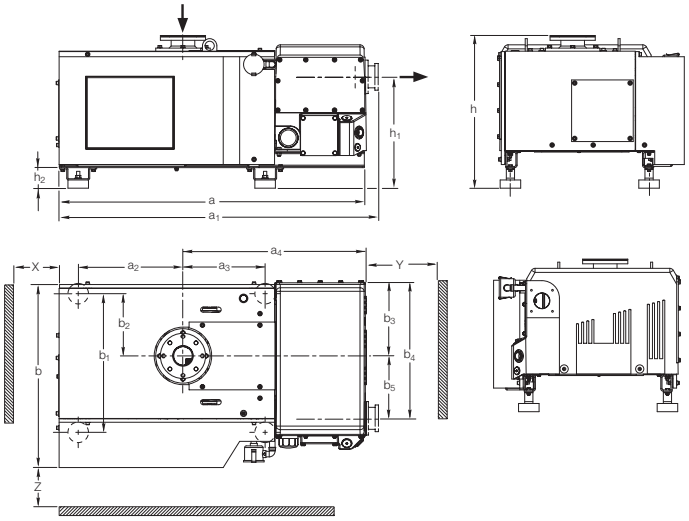

Type		a	a_1	a_2	a_3	a_4	b	b_1	b_2	b_3	b_4	b_5	h	h_1	h_2	X	Y	Z
630 B/750 B	mm	1510	1566	510	400	887	909	675	303	365	673	308	740	540	100	>500	>500	>500
	in.	59.45	61.65	20.08	15.75	34.92	35.79	26.57	11.93	14.37	26.50	12.13	29.13	21.26	3.94	19.69	19.69	19.69
630 BF/750 BF	mm	1510	1566	510	400	887	909	675	303	365	673	308	638	480	40	>500	>500	>500
	in.	59.45	61.65	20.08	15.75	34.92	35.79	26.57	11.93	14.37	26.50	12.13	25.12	18.90	1.57	19.69	19.69	19.69

Dimensional drawing for the SOGEVAC SV 630 B, SV 630 BF, 750 B and 750 BF

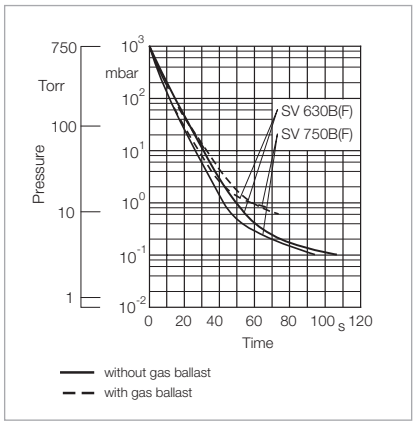

Pumpdown curve for a 1000 l vessel for 50 Hz pump operation

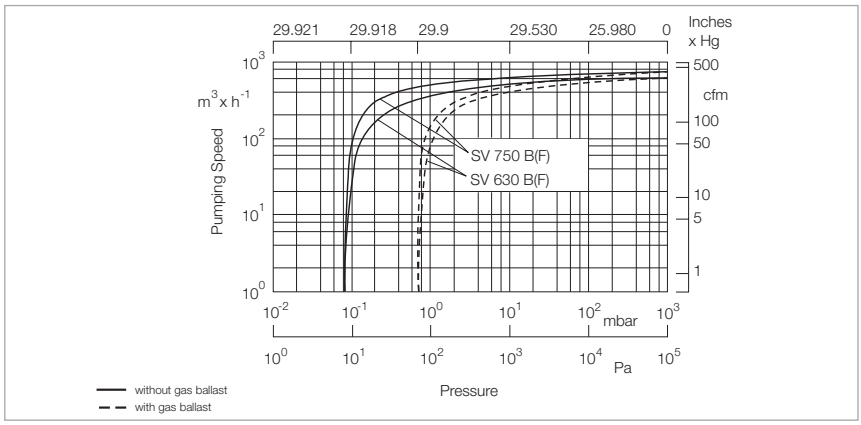

Pumping speed characteristics of the SOGEVAC SV 630 B(F) and 750 B(F) (60 Hz curves at the end of the chapter)

Technical Data

		SOGEVAC SV 630 B		SOGEVAC SV 630 BF		SOGEVAC SV 750 B/BF
		50 Hz	60 Hz	50 Hz	60 Hz	50 Hz
Nominal speed [1]	m^3/h (cfm)	700 (412.0)	840 (494.4)	700 (412.0)	840 (494.4)	840 (494.4)
Pumping speed [1]	m^3/h (cfm)	640 (376.7)	755 (444.4)	640 (376.7)	755 (444.4)	755 (444.4)
Ultimate total pressure without gas ballast [1]	mbar (Torr)	$< 8 \times 10^{-2}$ ($< 6 \times 10^{-2}$)				
Ultimate total pressure						
with 1 gas ballast[1]	mbar (Torr)	≤ 0,7 (≤ 0.5)				
with 2 gas ballast valves [1]	mbar (Torr)	≤ 2 (≤ 1.5)				
Water vapor tolerance [1]						
with 1 gas ballast [1], [2]	mbar (Torr)	40.0 (30.0)	50.0 (37.5)	25.0 (18.8)	30.0 (22.5)	50.0 (37.5)
with 2 gas ballast valves [1], [2]	mbar (Torr)	60.0 (45.0)	70.0 (52.5)	35.0 (26.3)	40.0 (30.0)	70.0 (52.5)
Max. water vapor capacity						
with 1 gas ballast [1], [2]	kg/h (qt/hr)	17.0 (18.0)	24.0 (25.4)	11.0 (11.6)	14.0 (14.8)	24.0 (25.4)
with 2 gas ballast valves [1], [2]	kg/h (qt/hr)	26.0 (27.5)	34.0 (35.9)	15.0 (15.9)	19.0 (20.1)	34.0 (35.9)
Controlled anti suck back valve 24 V DC		–	–	yes	yes	–
Oil filling min. / max.	l	20 / 23				
Noise level (averaged) [3]	dB(A)	72	75	72	75	75
Admissible ambient temperature	°C (°F)	12 to 40 (54 to 104)				
Motor power	kW (hp)	15.0 (20.2)	18.5 (25.0)	15.0 (20.2)	18.5 (25.0)	18.5 (25.0)
Nominal speed pump	min^{-1} (rpm)	820 (820)	1000 (1000)	820 (820)	1000 (1000)	1000 (1000)
Type of protection	IP	55-F				
Cooling		air	air	water	water	air / water
Thermostatic valve		no	no	yes	yes	no / yes
Temperature protection						
Pump		no	no	yes	yes	no / yes
Motor PTC		no	no	yes	yes	no / yes
Water quality	TH	–	–	4 to 8	4 to 8	–
Water pressure, min. / max.	bar (psig)	–	–	2/8 (29/114)	2/8 (29/114)	–
Materials (materials in contact with the gas)		Steel, cast iron, Aluminium, FPM (FKM), Glass, Polyamid 6.6, Filter material (Polymers, Paper), Epoxy resin & Glass fibre				
Net weight (with oil filling)	kg (lbs)	730 (1611)	760 (1678)	730 (1611)	760 (1678)	750 (1656)
Dimensions (L x W x H)	mm (in.)	1510 x 909 x 740	1510 x 909 x 740	1566 x 638 x 909	1566 x 638 x 909	1510 x 909 x 740
	(in.)	(59.45 x 35.79 x 29.13)	(59.45 x 35.79 x 29.13)	(61.65 x 25.12 x 35.79)	(61.65 x 25.12 x 35.79)	(59.45 x 35.79 x 29.13)
Connection						
Intake EUROPE / US	DN	100 PN 10 / 100 ISO-K	100 PN 10 / 100 ISO-K	DIN 160 Roots adapter	DIN 160 Roots adapter	100 PN 10 / 100 ISO-K
Exhaust EUROPE / US	DN	Option [4]	Option [4]	100 ISO-K	100 ISO-K	Option

[1] To DIN 28 400 and following numbers, with standard gas ballast
[2] Please ask Leybold for more information
[3] Operated at the ultimate pressure without gas ballast, free-field measurement at a distance of 1 m (3.5 ft)
[4] 77 mm exhaust with 4 x M10 holes on 145 mm circle.

Ordering Information

	SOGEVAC		
	SV 630 B 50/60 Hz	SV 630 BF 50/60 Hz	SV 750 B/BF 50 Hz
	Part No.	Part No.	Part No.
SOGEVAC SV 630 B with three-phase motor NEMA) 400 V, 50 Hz and 230/460 V, 60 Hz w/o terminal board	**960 865**	-	-
380/400/415/690 V, 50 Hz and 440/460 V, 60 Hz	**960 863**	-	-
200 V, 50 Hz (JIS) and 200 V, 60 Hz	**960 862**	-	-
SOGEVAC SV 630 BF with three-phase motor (NEMA) 400 V, 50 Hz and 230/460 V, 60 Hz w/o terminal board	-	**960 869**	-
380/400/415/690 V, 50 Hz and 440/460 V, 60 Hz	-	**960 867**	-
200 V, 50 Hz (JIS) and 200 V, 60 Hz	-	**960 866**	-
SOGEVAC SV 750 B with three-phase motor 380/400/415/690 V, 50 Hz	-	-	**960 875**
SOGEVAC SV 750 BF with three-phase motor 380/400/415/690 V, 50 Hz	-	-	**960 877**
Other voltages/frequencies	**upon request**	**upon request**	**upon request**
Filling with special oil	**upon request**	**upon request**	**upon request**

Ordering Information

	SOGEVAC		
	SV 630 B 50/60 Hz	SV 630 BF 50/60 Hz	SV 750 B/BF 50 Hz
	Part No.	Part No.	Part No.
Accessories			
Adapter for Roots pump			
RUVAC 1000	971 432 340	971 432 340	971 432 340
RUVAC 2000	971 432 350	Standard	971 432 350
RUVAC 2000	971 43 WH4400	971 43 WH4400	971 43 WH4400
Oil drain valve	711 30 114	Standard	711 30 114
Gas ballast kit			
electromagnetic, 24 V DC	971 438 170	Standard	971 438 170
Gas ballast, standard			
manual	Standard	971 446 490	971 446 490
2nd gas ballast valve			
electromagnetic, 24 V DC	-	971 438 160	-
manual	971 438 340	-	971 438 340
Exhaust filter monitoring gauge	951 94	951 94	951 94
Oil level check	971 425 760	971 425 760	971 425 760
Temperature switch	Standard	Standard	Standard
Water cooling with thermostatic valve	upon request	Standard	upon request
Intake kit DN 100 ISO-K	Standard	971 430 550	Standard
Exhaust filter overpressure switch	712 22 360	712 22 360	712 22 360
Oil filter bypass	712 36 390	712 36 390	712 36 390
Exhaust kit DN 100 PN 10 – 100 ISO-K	971 438 540	Standard	971 438 540 for B version, standard on SV 750 BF
Spare Parts			
Oil filter, standard	EK 960 08	EK 960 08	EK 960 08
Exhaust filter AFE SV630/SV750B/SV300B (8 are required)	971 431 120	971 431 120	971 431 120
Intake filter element			
Paper	710 35 242	710 35 242	710 35 242
Metal	E 710 37 734	E 710 37 734	E 710 37 734
Activated charcoal	710 37 724	710 37 724	710 37 724
Polyester	712 61 508	712 61 508	712 61 508
Seal kit FPM	971 437 310	971 437 310	971 437 310
Repair kit, complete	971 437 320	971 437 320	971 437 320
Generator kit	971 437 330	971 437 330	971 437 330
Maintenance kit	971 437 340	971 437 340	971 437 340

SOGEVAC SV 28 BI

SOGEVAC SV 28 BI

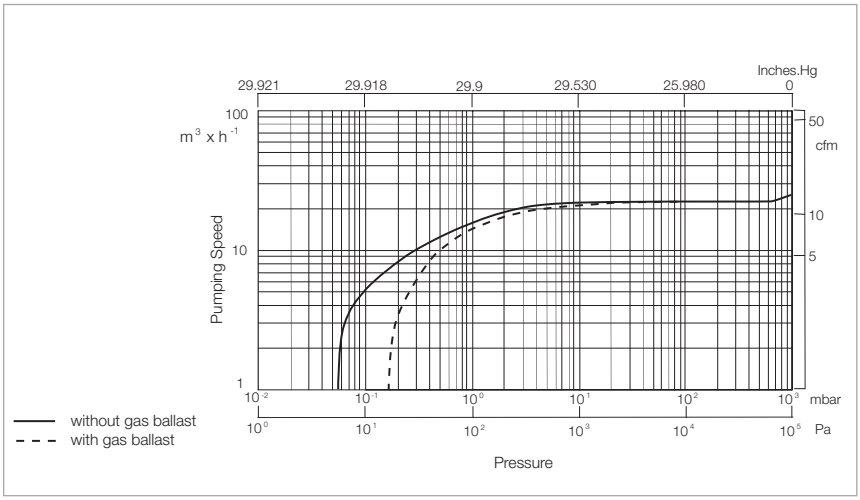

Pumping speed characteristics of the SOGEVAC SV 28 BI at 50 Hz
(60 Hz curves at the end of the chapter)

Advantages to the User

- 1 decade better ultimate pressure compared to SOGEVAC SV 25 B
- Integrated exhaust filter
- Integrated oil recovery system and anti suckback valve
- Extremely low noise level
- High reliability
- Variant concept
- Customer specific configurations
- High pumping speed stability at low pressure
- 2 oil casings (0.5 and 1.5 l) are available. The bigger oil volume allows longer oil life times

Typical Applications

- Mass spectrometry
- Lyophilisation
- Laboratory
- Refrigeration and air-conditioning
- Lamps and bulbs
- and more ...

Technical Data

		SOGEVAC SV 28 BI	
		50 Hz	60 Hz
Nominal pumping speed	m^3/h (cfm)	25 (14.8)	30 (17.8)
Pumping speed (according to PNEUROP)	m^3/h (cfm)	23 (13.6)	27 (15.9)
Ultimate total pressure without gas ballast	mbar (Torr)	≤ 0.05 (≤ 0.04)	
Ultimate total pressure with gas ballast	mbar (Torr)	≤ 0.5 (≤ 0.4)	
Water vapor tolerable load with gas ballast	mbar (Torr)	10.0 (7.5)	
Noise level (according to DIN 466535)			
3~ motor	dB(A)	54	57
1~ motor	dB(A)	57	60
Motor power			
3~ motor	kW (hp)	0.90 (1.2)	1.1 (1.5)
1~ motor	kW (hp)	0.75 (1.0)	0.9 (1.2)
Mains voltage and frequency			
3~ motor	V	see Ordering Information	
1~ mmotor	V	see Ordering Information	
Rated rotational speed	min^{-1} (rpm)	1500 (1500)	1800 (1800)
Type of protection	IP	55-F	
Leak rate	mbar x l/s	≤ 1 x 10^{-3}	
Oil capacity (depending on Part No.)	l (qt)	1.5 (1.59)	
Net weight (with oil filling) dependent of oil casing and motor	kg (lbs)	34 (75) to 37 (82)	
Connections			
intake	DN	25 ISO-KF	
exhaust	DN	25 ISO-KF	

Ordering Information

SOGEVAC SV 28 BI

	50 Hz	60 Hz
	Part No.	
SOGEVAC SV 28 BI with wide range three-phase motor 170–253 / 294–440 V, 50 Hz and 170–292 / 294–506 V, 60 Hz with gas ballast, with 1.5 l oil casing	**960 273**	
with wide range single-phase motor 180–264 V, 50/60 Hz with gas ballast, with 1.5 l oil casing	**960 277**	
with single-phase motor (US and Japan) 100 V +10%/-15%, 50/60 Hz and 115 V +10%/-15%, 60 Hz with gas ballast, with 1.5 l oil casing	**upon request**	
Other voltages/frequencies	**upon request**	
Filling with special oil	**upon request**	
Accessories		
Exhaust filter cartridge	**714 16 340**	
Spare Parts		
Repair kit	**971 462 690**	
Set of seals FPM (FKM)	**971 462 670**	
Generator kit three-phase single-phase	 **971 462 620** **971 462 630**	
Maintenance kit	**971 462 810**	

For further accessories see Chapter “Accessories TRIVAC” in the Catalog Part “Oil Sealed Vacuum Pumps TRIVAC”

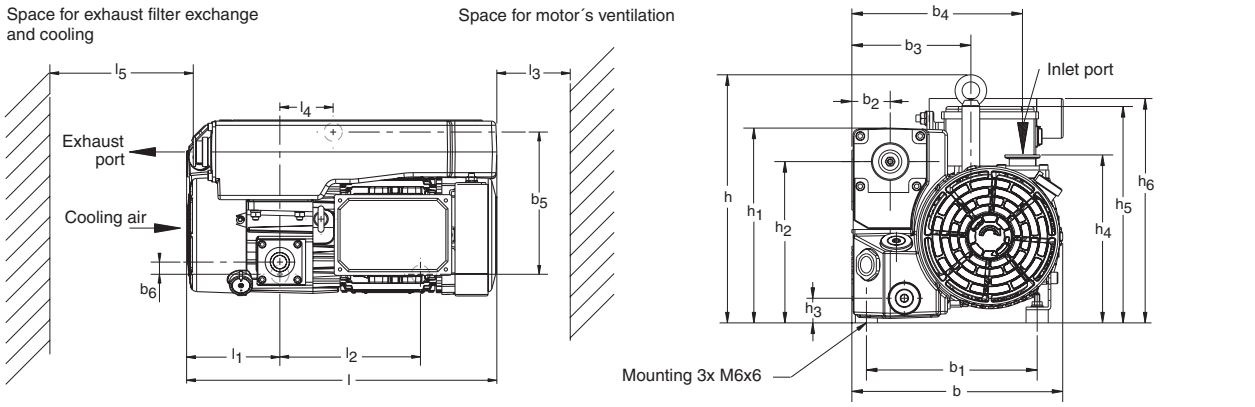

1), 2), 3)		l	b	h_6
1.5 l oil casing and 3 phase motor	mm	423	255	221
	in.	16.6	10	8.7
1.5 l oil casing and 1 phase motor	mm	423	258	262
	in.	16.6	10.1	10.3

Type		b	b_1	b_2	b_3	b_4	b_5	b_6	h	h_1	h_2	h_3	h_4	h_5	h_6	l	l_1	l_2	l_3	l_4	l_5
SV 28 BI	mm	1)	194	44	135	194	194	17	282	221	183	28	191	246	2)	3)	127	192	100	73	280
	in.	1)	7.64	1.73	5.31	7.64	7.64	.67	11.10	8.70	7.20	1.10	7.52	9.69	2)	3)	5.00	7.56	3.94	2.87	11.02

Dimensional drawing for the SOGEVAC SV 28 BI with standard single-phase motor, European version (dimensions for three-phase motor smaller)

Notes

SOGEVAC SV 40 BI

SOGEVAC SV 40 BI

Advantages to the User

- 1 decade better ultimate pressure compared to SOGEVAC SV 40 B
- Integrated exhaust filter
- Integrated oil recovery system and anti suckback valve
- Extremely low noise level
- High reliability
- Variant concept
- Customer specific configurations
- High pumping speed stability at low pressure

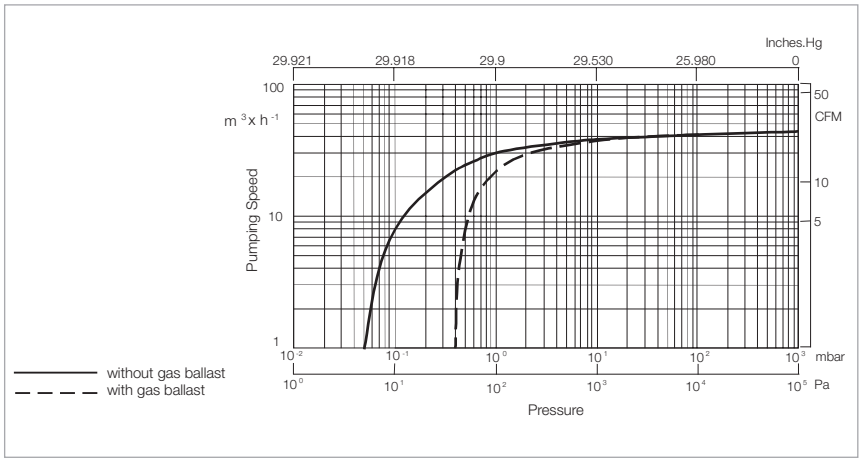

Pumping speed characteristics of the SOGEVAC SV 40 BI at 50 Hz
(60 Hz curves at the end of the chapter)

Typical Applications

- Mass spectrometry
- Lyophilisation
- Refrigeration and air-conditioning
- Laboratory
- Lamps and bulbs
- and more ...

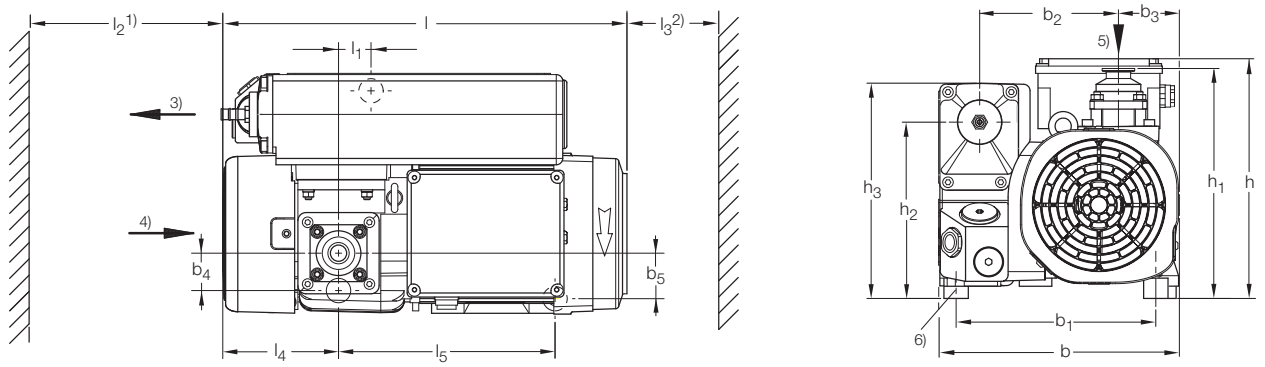

1) Space for exhaust filter exchange and cooling
2) Space for the motor's ventilation
3) Exhaust port
4) Inlet port
5) Cooling air
6) Mounting 3x M 8 x 7

Type		b	b_1	b_2	b_3	b_4	b_5	h	h_1	h_2	h_3	l	l_1	l_2	l_3	l_4	l_5
SV 40 BI	mm	296	246	171	75	46	56	295	283	217	265	497	40	350	150	142	266,5
	in.	11.65	9.69	6.73	2.95	1.81	2.20	11.61	11.14	8.54	10.43	19.57	1.57	13.78	5.91	5.59	10.49

Dimensional drawing for the SOGEVAC SV 40 BI with standard single-phase motor, European version (dimensions for three-phase motor smaller)

Technical Data

		SOGEVAC SV 40 BI	
		50 Hz	60 Hz
Nominal pumping speed	m^3/h (cfm)	42 (24.8)	50 (29.5)
Pumping speed (according to PNEUROP)	m^3/h (cfm)	40 (23.6)	48 (28.3)
Ultimate total pressure without gas ballast	mbar (Torr)	$\leq 5 \times 10^{-2}$ ($\leq 3.75 \times 10^{-2}$)	
Ultimate total pressure with gas ballast	mbar (Torr)	≤ 0.5 (≤ 0.4)	
Water vapor tolerable load with gas ballast	mbar (Torr)	10.0 (7.5)	
Motor power	kW (hp)	1.1 (1.5)	1.3 (1.8)
Mains voltage and frequency	V	see Ordering Information	
Rated rotational speed	min^{-1} (rpm)	1500 (1500)	1800 (1800)
Type of protection	IP	55-F	
Leak rate	mbar x l/s	$\leq 1 \times 10^{-3}$	
Oil capacity	l (qt)	1.0 (1.1)	
Net weight (with oil filling)		43 (94.9)	45 (99.3)
Connections			
intake	DN	40 ISO-KF	
exhaust	DN	40 ISO-KF	

Ordering Information

	SOGEVAC SV 40 BI	
	50 Hz	60 Hz
	Part No.	
SOGEVAC SV 40 BI		
with three-phase motor		
without gas ballast		
230/400 V, 50 Hz and 460 V, 60 Hz	**960 330**	
with small gas ballast		
230/400 V, 50 Hz and 460 V, 60 Hz	**960 331**	
Other voltages/frequencies or single-phase motors	**upon request**	
Filling with special oil	**upon request**	
Accessories		
Exhaust filter cartridge AFE SV40B I	**971 471 470**	
Spare Parts		
Repair kit	**971 443 150**	
Set of seal	**971 427 640**	
Vacuum generator		
with gas ballast	**971 443 160**	
without gas ballast	**971 443 170**	
Maintenance kit	**971 427 660**	

For further accessories see Chapter “Accessories TRIVAC” in the Catalog Part “Oil Sealed Vacuum Pumps TRIVAC”

Pumps Prepared with PFPE for Use with Oxygen

Application

As soon as oxygen is being pumped at concentrations exceeding 20% (atmospheric air) the SOGEVAC pump needs to be prepared especially for such operation.

Safety Precautions

As standard, the pumps are equipped with FPM (FKM) seals and an oil filter bypass. Before assembly, all parts are degreased and the pumps are tested with PFPE lubricant (LVO 400). Thereafter the pumps are emptied and delivered without PFPE lubricant (LVO 400).

The pumps are supplied with special Operating Instructions (GA), Spare Parts List (ET) blue colored covers. This special information must be observed.

Due to the use of PFPE lubricant (LVO 400) and grease, also the maintenance schedule has been changed accordingly.

Only degreased accessories (filters and valves) and original spare parts from Leybold Vacuum must be used.

Product Selection

SOGEVAC pumps of the following sizes are available:
SV 16, SV 25, SV 65 B, SV 100 B, SV 200, SV 300 B, SV 630 B (F) and SV 750 B.

The use of PFPE lubricant (LVO 400) will also impair the attainable ultimate pressure depending on the size of the pump.

Local safety regulations (handling of O_2 and PFPE (LVO 400)) must be observed!

Advantages to the User

- High pumping speed down to ultimate pressure
- Operation of the pump at all pressures between 1000 mbar (750 Torr) and ultimate pressure is possible
- Integrated and effective separation of oil mist
- Compact design
- Air or water cooled
- Environment friendly (low noise and low heat radiation, low vibrations)
- Available in many different variants, motor voltages, ports etc.

Pump		Ultimate pressure (mbar (Torr)	
		without gas ballast	with gas ballast
	Part No.		
SV 16 D	960184V2016, 960185V2016, 960186V2016	1.0 (0.75)	3.0 (2.25)
SV 25 D	960211V2016, 960215V2016	1.0 (0.75)	3.0 (2.25)
SV 65 B	960400V2016, 960401V2016, 960412V2016	1.0 (0.75)	2.5 (1.88)
SV 100 B	960500V2016, 960505V2016, 960512V2016	1.0 (0.75)	2.5 (1.88)
SV 200	1092616, 1092716, 9502716	0.5 (0.375)	1.5 (1.13)
SV 300 B	960702V2016, 960707V2016, 960717V2016	0.5 (0.375)	1.5 (1.13)
SV 630 B(F)	960863V3011	1.0 (0.75)	1.5 (1.13)
SV 750 B(F)	960877V3001	1.0 (0.75)	1.5 (1.13)

Notes

SOGEVAC SV 40 ATEX (Explosion Protected and Pressure Burst Resistant)

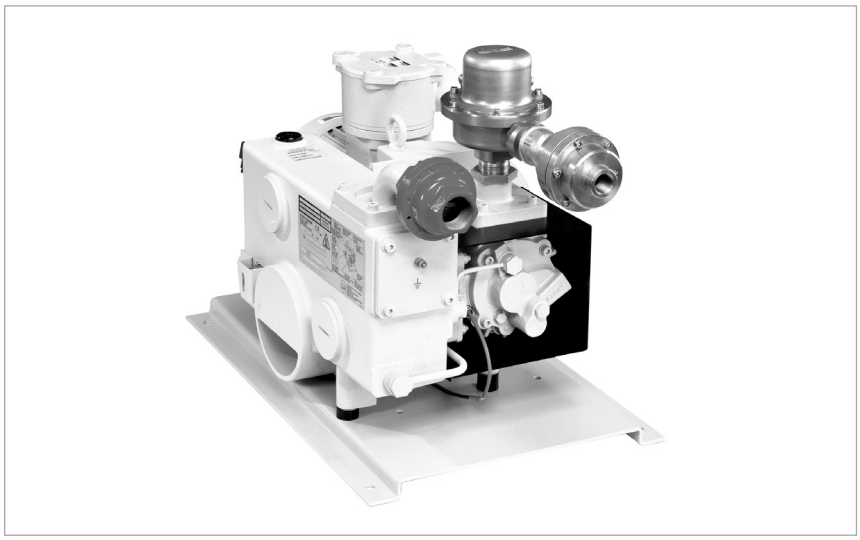

IIA version with MR 40 pressure regulator on the suction side and horizontal suction flanges

The SOGEVAC SV 40 ATEX Cat. 1 rotary vane vacuum pumps comply with the European Directive 2014/34/EU regarding “Equipment and protective systems for use in potentially explosive atmospheres”.

Classification

- Equipment group: II
- Categories: 1 G inside
  2 G outside
- Zone: 0 inside
  1 outside
- Material group: IIB + H_2 or IIA
- Temperature classes:
  IIB + H_2 at 50 Hz, T4
  at 60 Hz, 160 °C
  IIA at 50 and 60 Hz, T3

Applications

These pumps are suited for pumping solvents, for drying, filling applications including IIB + H_2 or IIA material groups.

Safety Characteristics

In order to fulfill the requirements of the safety regulations, the SOGEVAC SV 40 ATEX Cat. 1 pumps are equipped with:

- 1 flame arrester on their suction and exhaust sides
- 1 pressure transmitter controlling the pressure in the oil casing
- 1 temperature sensor controlling the pump temperature
- 1 inlet gas temperature monitoring on the inlet side of the pump (for IIB + H_2 versions only).

Furthermore, these pumps have an explosion-proof design.

Advantages to the User

- High pumping speed down to ultimate pressure
- High vapor pumping capability
- Running possible at any pressure, from 1000 mbar (750 Torr) to ultimate pressure
- Integrated and efficient oil mist separation
- Compact design
- Air cooled
- Environment-friendliness (low noise level, no cooling water, low vibration operation)
- Many different designs available

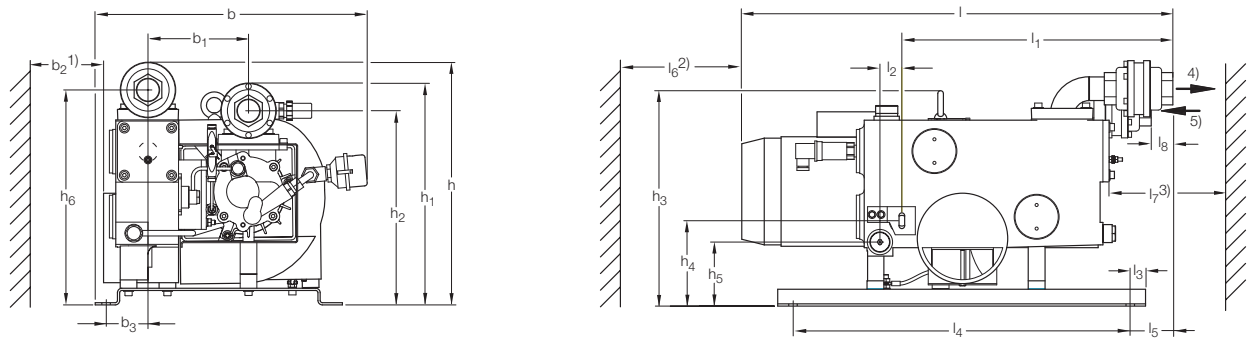

Type		b	b_1	b_2	b_3	h	h_1	h_2	h_3	h_4	h_5	h_6	l	l_1	l_2	l_3	l_4	l_5	l_6	l_7	l_8
SV 40 ATEX	mm	490	181	100	75	437	400	350	383	152	114	387	768	483	39	40	575	89	150	400	39
	in.	19.29	7.13	3.94	2.95	17.20	15.75	13.78	15.08	5.98	4.49	15.24	30.24	19.02	1.54	1.57	22.64	3.50	5.91	15.75	1.54

1) Space for the ventilation
2) Space for the motor's ventilation
3) Space for exhaust filter exchange and cooling
4) Exhaust port
5) Inlet port

Dimensional drawing for the SOGEVAC SV 40 ATEX with standard motor, European version

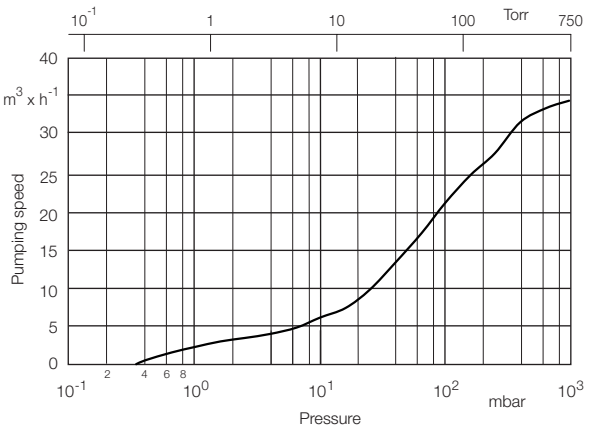

Pumping speed characteristics of the SOGEVAC SV 40 ATEX at 50 Hz for gases of the material group IIB + H_2
(60 Hz curves at the end of the chapter)

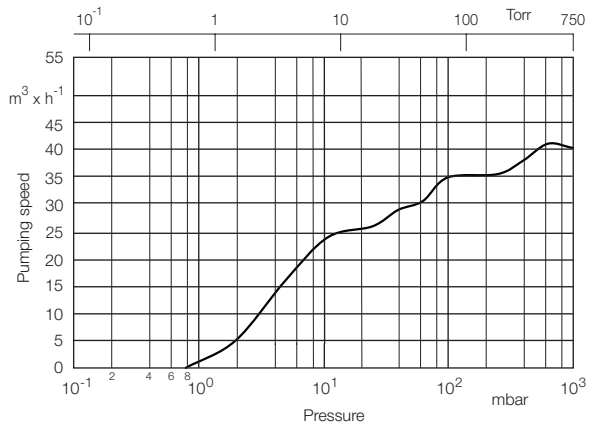

Pumping speed characteristics of the SOGEVAC SV 40 ATEX at 50 Hz for gases of the material group IIA
(60 Hz curves at the end of the chapter)

Technical Data

		SOGEVAC SV 40 ATEX	
		50 Hz	60 Hz
Nominal pumping speed	m^3/h (cfm)	46.0 (27.1)	55.2 (32.5)
Pumping speed (according to PNEUROP)			
IIB + H_2	m^3/h (cfm)	26 (15.3)	29 (17.1)
IIA	m^3/h (cfm)	35 (20.6)	42 (24.7)
Ultimate total pressure without gas ballast			
IIA / IIB + H_2	mbar (Torr)	0.8 (0.6)	
Ultimate total pressure with gas ballast			
II A / IIB + H_2	mbar (Torr)	1.5 (1.1)	
Noise level (according to DIN 45635)	dB(A)	63	68
Water vapor tolerable load with gas ballast	mbar (Torr)	0.30 (0.23)	
Motor power	kW (hp)	1.5 (2.0)	1.8 (2.4)
Rated rotational speed	min^{-1} (rpm)	1500 (1500)	1800 (1800)
Standard voltage	V	230/400 (± 10%)	460 (± 10%)
Type of protection	IP	55-F	55-F
Leak rate	mbar x l/s	$\leq 1 \times 10^{-3}$	
Type of oil		LVO 210 (IIB + H_2) or LVO 200 (IIA)	
Oil capacity, approx.	l (qt)	2 (2.1)	
Materials (materials in contact with the gas)		Steel, cast iron, Aluminium, Bronze, FPM (FKM), Glass, Polyamid 6.6, Filter material (Polymers, Paper), epoxy resin & glass fibre	
Weight (with oil filling)	kg (lbs)	110 (243)	
Connections			
intake			
IIB + H_2	G	1 1/4"	
IIA	G	3/4"	
exhaust	G	1 1/4"	
Maximum gas inlet temperature	°C (°F)	40 (104)	

Ordering Information

SOGEVAC SV 40 ATEX

	50 Hz	60 Hz
	Part No.	**Part No.**
SOGEVAC SV 40 ATEX LA IIB + H_2 in accordance with 2014/34/EU [Ex II 1/2 G Ex h IIB+H2 T4 Ga/Gb (+5°C<Ta<40°C) EC Type Examination Certificate: PTB 04 ATEX 4013 Issue 1 with permanent gas ballast	**960 345**	**–**
SOGEVAC SV 40 ATEX LA IIB + H_2 in accordance with 2014/34/EU [Ex Ex II 1/2 G Ex h IIB+H2 160C Ga/Gb (+5°C<Ta<40°C) EC Type Examination Certificate: PTB 04 ATEX 4013 Issue 1 without gas ballast	**–**	**960 349 V 3060**
SOGEVAC SV 40 ATEX IIB + H_2 in accordance with 2014/34/EU [Ex II 1/2 G Ex h IIB+H2 T4 Ga/Gb (+5°C<Ta<40°C) EC Type Examination Certificate: PTB 04 ATEX 4013 Issue 1 without gas ballast	**960 346**	**–**
SOGEVAC SV 40 ATEX IIB + H_2 in accordance with 2014/34/EU [Ex II 1/2 G Ex h IIB+H2 T4 Ga/Gb (+5°C<Ta<40°C) EC Type Examination Certificate: PTB 04 ATEX 4013 Issue 1 with gas ballast and MR40 B pressure regulator	**960 343**	**–**
SOGEVAC SV 40 ATEX IIA in accordance with 2014/34/EU [Ex II 1/2 G Ex h IIA T3 Ga/Gb (+5°C<Ta<40°C) EC Type Examination Certificate: PTB 04 ATEX 4011 Issue 1 without gas ballast	**960 344**	**–**
SOGEVAC SV 40 ATEX IIA in accordance with 2014/34/EU [Ex II 1/2 G Ex h IIA T3 Ga/Gb (+5°C<Ta<40°C) EC Type Examination Certificate: PTB 04 ATEX 4011 Issue 1 with gas ballast and MR40 B pressure regulator	**960 342**	**–**
Accessories	**upon request**	**upon request**
Spare Parts	**upon request**	**upon request**

For all enquiries and orders relating to category 1 and 2 ATEX products please exclusively use our ATEX questionnaire.
You can find this questionnaire at the end of the full-line catalog together with the fax forms or
on the Internet under “www.leybold.com” under Download Documents in the area Documentation.

ATEX Category 2 Pumps

Application

As soon as gases capable of exploding are being pumped or if such gases are present in the vicinity, then the customer must perform a hazard analysis. In Europe, the ATEX Directives 2014/34/EU need to be observed in this regard. For equipment in Zone 1, ATEX Category 3 SOGEVAC pumps are available.

Classification

As in the table below.

Safety Precautions

As standard, the pumps are equipped with FPM (FKM) seals, oil filter bypass and oil LEYBONOL LVO 210. Special ATEX exhaust filters, coupling components, motors, floats and final inspections are used, respectively performed. A DN 16 ISO-KF connection for the gas ballast is supplied.
All pumps are equipped with Pt100 temperature, oil level and oil casing pressure sensors. The motors are equipped with PTC thermistors.

SOGEVAC pumps of the following sizes are available:
SV 40 B, SV 65 B, SV 100 B, SV 200, SV 300 B, SV 630 B and SV 750 B

The pumps are supplied with special Operating Instructions (GA), Spare Parts List (ET) and include a CE declaration. This special information must be observed.

LV Restrictions apply for Service and Repairs: please consult us.

Only special accessories (filters, valves, taps) and original spare parts from Leybold must be used.

Advantages to be User

- High pumping speed down to ultimate pressure
- Operation of the pump at all pressures between 1000 mbar (750 Torr) and ultimate pressure is possible
- Integrated and effective separation of oil mist
- Compact design
- Air or water cooled
- Different gas ballast variants: without, manual and permanent upon request
- Available in many different variants, motor voltages, ports etc.

The pumping speed curves for ATEX Category 2 pumps are the same as for non ATEX standard SOGEVAC pumps.

Pump		Ultimate pressure, mbar (Torr) without gas ballast	Ultimate pressure, mbar (Torr) with gas ballast
	Part No.		
SV 40 B air cooled Ex II (i) 2G h IIB + H_2 T3 Gb / (o) 2G IIC T4 Gb (10 °C ≤ T_a ≤ 40 °C) X	**960305A22**	0.5 (0.38)	1.5 (1.13)
SV 65 B air cooled Ex II (i) 2G h IIB + H_2 T3 Gb / (o) 2G IIC T4 Gb (10 °C ≤ T_a ≤ 40 °C) X	**960405A22**	0.5 (0.38)	1.5 (1.13)
SV 100 B air cooled Ex II (i) 2G h IIB + H_2 T3 Gb / (o) 2G IIC T4 Gb (10 °C ≤ T_a ≤ 40 °C) X	**960505A22**	0.5 (0.38)	1.5 (1.13)
SV 120 B air cooled Ex II (i) 2G h IIB + H_2 T3 Gb / (o) 2G IIC T4 Gb (10 °C ≤ T_a ≤ 40 °C) X	**upon request**	0.5 (0.38)	1.5 (1.13)
SV 200 air cooled Ex II (i) 2G h IIB + H_2 T3 Gb / (o) 2G IIC T3 Gb (10 °C ≤ T_a ≤ 40 °C) X	**10927A22**	0.15 (1.13)	0.7 (0.53)
SV 300 B air cooled Ex II (i) 2G h IIB + H_2 T3 Gb / (o) 2G IIC T3 Gb (10 °C ≤ T_a ≤ 40 °C) X	**960702A22**	0.15 (1.13)	0.7 (0.53)
SV 630 B air cooled Ex II (i) 2G h IIB + H_2 T3 Gb / (o) 3GD IIC T3 Gb (150 °C) (10 ≤ T_a ≤ 40 °C) X	**upon request**	0.15 (1.13)	0.7 (0.53)
SV 630 BF water cooled Ex II (i) 2G h IIB + H_2 T3 Gb / (o) 3GD IIC T3 Gb (150 °C) (10 ≤ T_a ≤ 40 °C) X	**upon request**	0.15 (1.13)	0.7 (0.53)
SV 750 B air cooled Ex II (i) 2G h IIB + H_2 T3 Gb / (o) 3GD IIC T3 Gb (150 °C) (10 ≤ T_a ≤ 40 °C) X	**upon request**	0.15 (1.13)	0.7 (0.53)
SV 750 BF water cooled Ex II (i) 2G h IIB + H_2 T3 Gb / (o) 3GD IIC T3 Gb (150 °C) (10 ≤ T_a ≤ 40 °C) X	**upon request**	0.15 (1.13)	0.7 (0.53)

ATEX outside Dust: upon request. For SV 630 B(F): as on existing Cat 3 pumps.
SV 630 B(F) and SV 750 B(F) are ATEX Cat 3 only outside.
Gas ballast connection: with DN 16 ISO-KF as on Cat 3 pumps. Manual gas ballast is standard.
SV 40 B to SV 120 B with manual gas ballast are T3 inside. Pumps with permanent gas ballast are T4 inside.
Big gas ballast or no gas ballast available upon request.

For all enquiries and orders relating to category 1 and 2 ATEX products please exclusively use our ATEX questionnaire.
You can find this questionnaire at the end of the full-line catalog together with the fax forms or
on the Internet under “www.leybold.com” under Download Documents in the area Documentation.

ATEX Category 3 Pumps

Application

As soon as gases capable of exploding are being pumped or if such gases are present in the vicinity, then the customer must perform a hazard analysis. In Europe, the ATEX Directives 2014/34/EU need to be observed in this regard. For equipment in Zone 2, ATEX Category 3 SOGEVAC pumps are available.

Classification

As in the table below.

Safety Precautions

As standard, the pumps are equipped with FPM (FKM) seals, oil filter bypass and oil LEYBONOL LVO 210. Special ATEX exhaust filters, coupling components, motors, floats and final inspections are used, respectively performed. A DN 16 ISO-KF connection for the gas ballast is supplied.
All pumps are equipped with Pt100 temperature, oil level and oil casing pressure sensors. The motors are equipped with PTC thermistors.

SOGEVAC pumps of the following sizes are available:
SV 40 B, SV 65 B, SV 100 B, SV 200, SV 300 B, SV 630 B and SV 750 B.

The pumps are supplied with special Operating Instructions (GA), Spare Parts List (ET) and include a CE declaration. This special information must be observed.

Only special accessories (filters, valves, taps) and original spare parts from Leybold must be used.

Advantages to be User

- High pumping speed down to ultimate pressure
- Continuous operation of the pump at all pressures between 1000 mbar (750 Torr) and ultimate pressure is possible
- Integrated and effective separation of oil mist
- Compact design
- Air or water cooled
- Environment friendly (low noise and low heat radiation, low vibrations)
- Available in many different variants, motor voltages, ports etc

The pumping speed curves for ATEX Category 3 pumps are the same as for non ATEX standard SOGEVAC pumps.

Pump		Ultimate pressure, mbar (Torr) without gas ballast	Ultimate pressure, mbar (Torr) with gas ballast
	Part No.		
SV 40 B air cooled Ex II (i) 3G IIC T3 Gb / (o) 3 GDh IIC T3 Gb (150 °C)(10 ≤ T_a ≤ 40 °C) X	**960305A33**	0.5 (0.38)	1.5 (1.13)
SV 65 B air cooled Ex II (i) 3 G IIC T3 Gb / (o) 3 GDh IIC T3 Gb (150 °C)(10 ≤ T_a ≤ 40 °C) X	**960405A33**	0.5 (0.38)	1.5 (1.13)
SV 100 B air cooled Ex II (i) 3 G IIC T3 Gb / (o) 3 GDh IIC T3 Gb (150 °C)(10 ≤ T_a ≤ 40 °C) X	**960505A33**	0.5 (0.38)	1.5 (1.13)
SV 200 air cooled Ex II (i) 3 G IIC T3 Gb / (o) 3 GDh IIC T3 Gb (150 °C)(10 ≤ T_a ≤ 40 °C) X	**10927A33**	0.15 (1.13)	0.7 (0.53)
SV 300 B air cooled Ex II (i) 3 G IIC T3 Gb / (o) 3 GDh IIC T3 Gb (150 °C)(10 ≤ T_a ≤ 40 °C) X	**960702A33**	0.15 (1.13)	0.7 (0.53)
SV 630 air cooled Ex II (i) 3 G IIC T3 / (o) 3 GDh IIC T3 (150 °C)(10 ≤ T_a ≤ 40 °C) X	**960863A33**	0.15 (1.13)	0.7 (0.53)
SV 630 BF water cooled Ex II (i) 3 G IIC T3 Gb / (o) 3 GDh IIC T3 Gb (150 °C)(10 ≤ T_a ≤ 40 °C) X	**960867A33**	0.15 (1.13)	0.7 (0.53)
SV 750 B air cooled Ex II (i) 3 G IIC T3 Gb / (o) 3 GDh IIC T3 Gb (150 °C)(10 ≤ T_a ≤ 40 °C) X	**upon request**	0.15 (1.13)	0.7 (0.53)
SV 750 BF water cooled Ex II (i) 3 G IIC T3 Gb / (o) 3 GDh IIC T3 Gb (150 °C)(10 ≤ T_a ≤ 40 °C) X	**upon request**	0.15 (1.13)	0.7 (0.53)

For all enquiries and orders relating to category 1 and 2 ATEX products please exclusively use our ATEX questionnaire. You can find this questionnaire at the end of the full-line catalog together with the fax forms or on the Internet under “www.leybold.com” under Download Documents in the area Documentation.

Accessories

Double Inlet Filter and Roots Adapter TwinFilter 500 for SOGEVAC SV 470 B(F) and SV 570 B(F)

Double inlet filter and Roots adapter TwinFilter 500

To avoid dust particles in your process use the new double inlet filter and Roots adapter TwinFilter 500.

The TwinFilter replaces the otherwise needed Roots pump adapter to adapt a Roots vacuum pump. The Roots pump can be fitted directly on to the TwinFilter.

Typical Applications

- Protects the pump against dust and particles
- Compact forevacuum pump combination

Advantages to the User

- No external frame required: costs and space savings
- Very compact combinations: space savings yet roughing pump protection
- Allows to have 2 different protection filters in series: more efficient filtration and longer filter life time
- No elbows, bellows, adapters required for filter mounting: cost savings

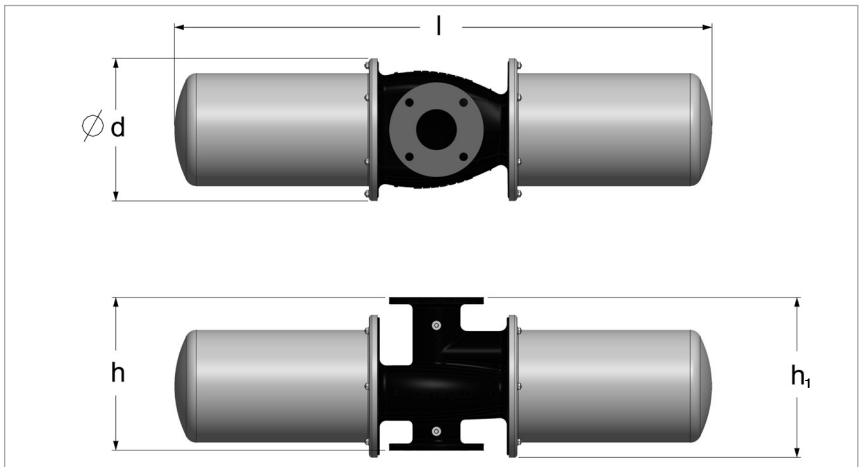

Type		l	h	h_1	d
TwinFilter 500	mm	1193	339	355	316
	in.	46.97	13.35	13.98	12.44

Dimensional drawing for the double inlet filter and Roots adapter TwinFilter 500

Adapter connection options

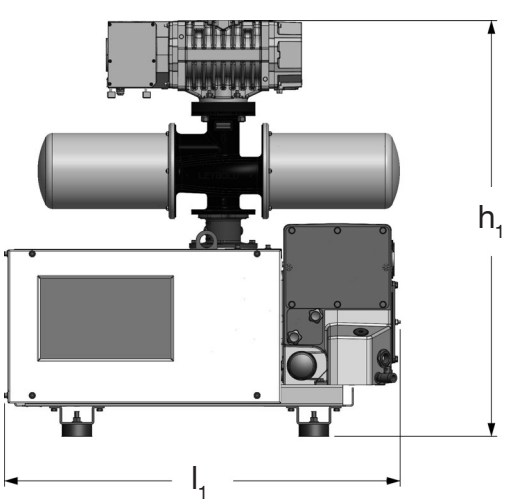

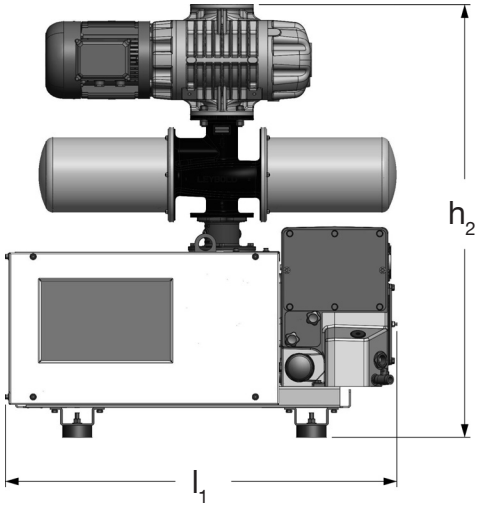

	l_1	l_2	h_1	h_2	h_3	h_4
mm	1305	1453	1372	1442	1572	1449
in.	51.38	57.20	54.02	56.77	61.89	57.05

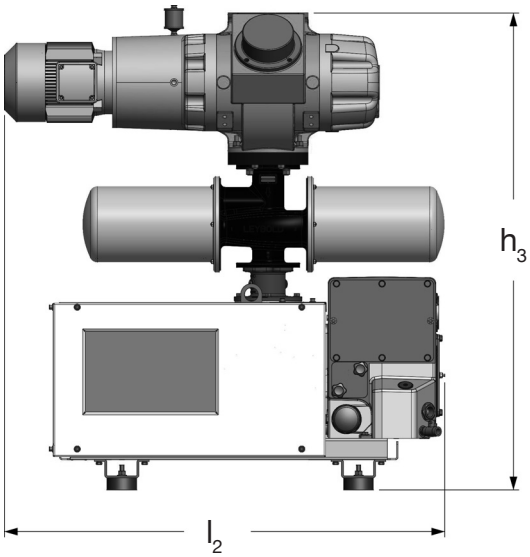

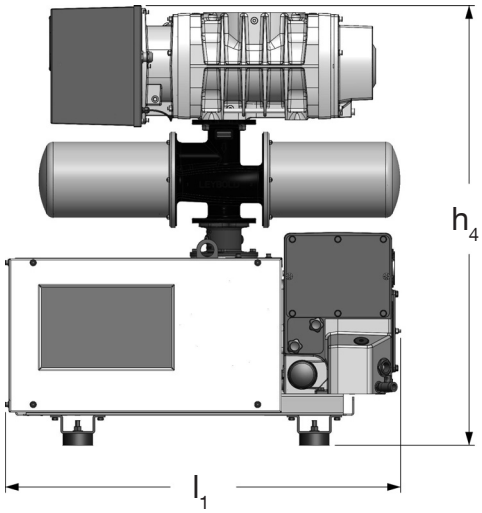

Ways in which to mount the Roots vacuum pump on the SOGEVAC SV 470 B(F) or SV 570 B(F)
Top left with RUVAC WH 700/702, top right with RUVAC WA(U)/WS(U) 1001,
bottom left with RUVAC WA(U) 2001, bottom right with RUVAC WH(U) 2500

Gas flow

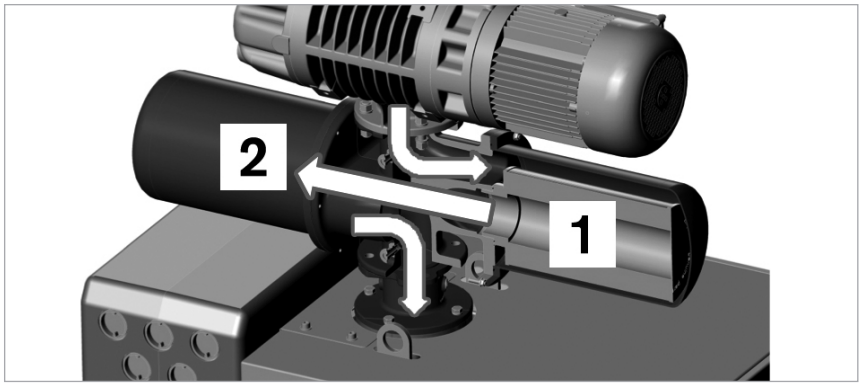

Gas flow

The gas passes through the filter (1), then through the filter (2) and then enters the roughing pump.

Selection of the filter cartridges

Filter type / Applications	Paper 2 mm	Polyester 2 µm	Polyester 25 µm	Metal 0.09 m (0.004 in.)	Activated charcoal
Dry processes with dust, powders, chips etc.	2		1		
Wet (vapor) processes with dust, powders, chips etc.		2	1		
Heavy particles, plastics, glass, packaging materials, food stuff, etc.		2		1	
Vapors of high molecular weight (solvent, resin and acid vapors, alkaline solutions etc.)		2			1

1= Filter No. 1 in the diagram “Gas flow”
2= Filter No. 2 in the diagram “Gas flow”

Technical Data

Double Inlet Filter TwinFilter 500

Double Inlet Filter and Roots Adapter TwinFilter 500	Paper Cartridge	Polyester Filter Cartridge	Polyester Filter Cartridge	Metal Cartridge	Active Charcoal Cartridge
Particle size / mesh	2 µm	2 µm	25 µm	0.09 mm (0.004 in.)	
Pumping speed [1] loss by new filters (approx.)					
100 mbar (75.0 Torr)	< 1%	< 1%	< 1%	< 1%	< 1%
10 mbar (7.5 Torr)	< 1%	< 1%	< 1%	< 1%	< 7%
1 mbar (0.75 Torr)	< 13%	< 6%	< 4%	< 3%	< 33%
Efficiency for					
2 µm particle	98%	98%	–	–	–
5 µm particle	99%	99%	–	–	–
Weight					
Net max. kg (lbs)	82 (181)				
Cover kg (lbs)	< 10 (< 22)				
Filter kg (lbs)	< 10 (< 22)				
Material	Cast iron, steel, filter material				

[1] Pumping speed loss of each filter adds up for the total loss

Ordering Information

Double Inlet Filter TwinFilter 500

Double Inlet Filter and Roots Adapter TwinFilter 500	Paper Cartridge 2 µm	Polyester Filter Cartridge 2 µm	Polyester Filter Cartridge 25 µm	Metal Cartridge 0.09 mm (0.004 in.)	Active Charcoal Cartridge
For fitting to SOGEVAC	SV 470 B(F) / SV 570 B(F)	SV 470 B(F) / SV 570 B(F)	SV 470 B(F) / SV 570 B(F)	SV 470 B(F) / SV 570 B(F)	SV 470 B(F) / SV 570 B(F)
Part No. 9516248PAPO with paper cartridge and polyester filter cartridge 2 µm	X	–	X	–	–
Part No. 9516248PP with polyester filter cartridge 2 µm and 25 µm	–	X	X	–	–
Part No. 9516248MAPO with polyester filter cartridge 2 µm and metall cartridge	–	X	–	X	–
Part No. 9516248CAPO with polyester filter cartridge 2 µm and active charcoal cartridge	–	X	–	–	X
Part No. 9516248V without filter	X	X	X	X	X
Spare inlet filter **Part No. EK95162PA**	X	–	–	–	–
Spare inlet filter **Part No. EK95162PO2**	–	X	–	–	–
Spare inlet filter **Part No. EK95162PO25**	–	–	X	–	–
Spare inlet filter **Part No. EK95162MA**	–	–	–	X	–
Spare inlet filter **Part No. EK95162CA**	–	–	–	–	X

Roots adapter

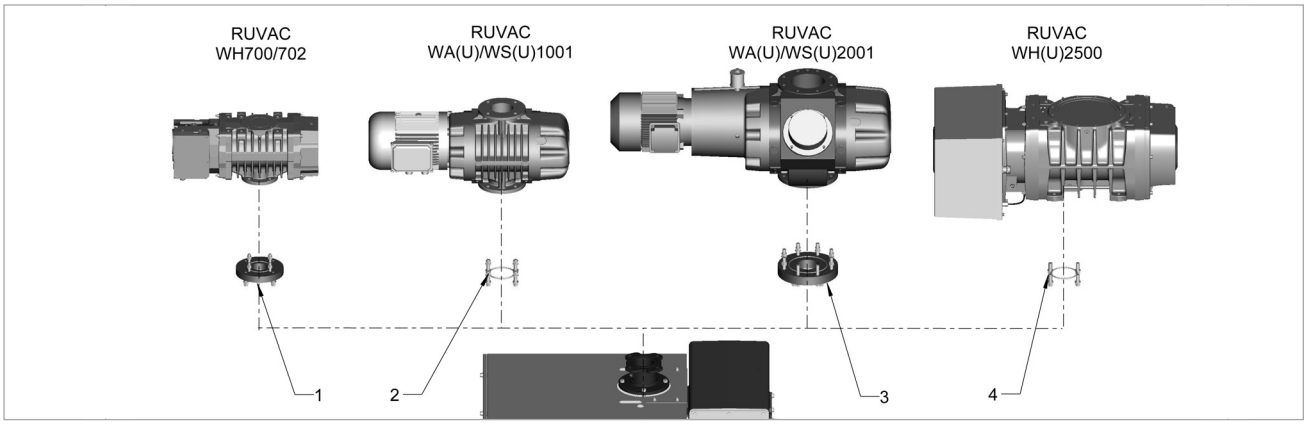

Roots adapter connections

Ordering Information

Roots adapter

	Part No.
Adapter for Roots vacuum pump	
RUVAC WH 700/702	**9516241V**
RUVAC WA(U)/WS(U) 1001	**9516242V**
RUVAC WA(U)/WS(U) 2001	**9516243V**
RUVAC WH(U) 2500	**9516244V**

Dust Filters (Suction Side)

SOGEVAC SV 40 with connected F 40 dust filter and different types of filter cartridges

The filters consist of a steel housing and a lid with three quick locking clips

Advantages to the User

- Same housing for different cartridges
- High separation capacity
- Quickly exchangeable cartridge

Paper Filter Cartridge (Standard)

- Separates particles down to 5 µm (Dry process: dust, powders, chips etc.)

Polyester Filter Cartridge

- Separation of particles down to 5 µm (Moist process: dust, powders, chips etc.)

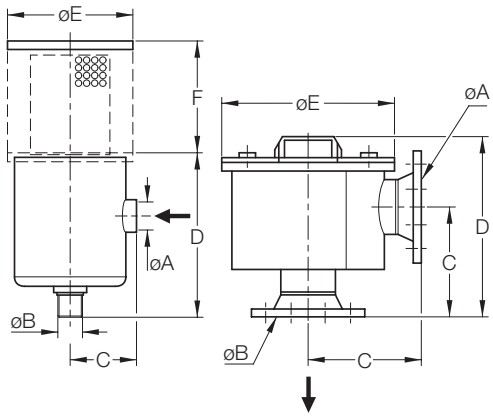

Type		⌀ A	⌀ B	C	D	⌀ E	F	Weight (kg (lbs))
F 16-25	mm	G 1/2"	G 1/2"	54	104	100	70	1
	in.	G 1/2"	G 1/2"	2.13	4.09	3.94	2.76	2.2
F 40	mm	G 1 1/4"	G 1 1/4"	74	115	135	75	1.5
	in.	G 1 1/4"	G 1 1/4"	2.91	4.53	5.31	2.95	3.31
F 65-100	mm	G 1 1/4"	G 1 1/4"	98	172	172	130	2
	in.	G 1 1/4"	G 1 1/4"	3.86	6.77	6.77	5.12	4.4
F 200-300	mm	G 2"	G 2"	118	287	200	230	4.5
	in.	G 2"	G 2"	4.65	11.3	7.87	9.06	9.9
F 200-300	mm	63 ISO-K	63 ISO-K	160	357	258	250	15
	in.	63 ISO-K	63 ISO-K	6.3	14.06	10.16	9.84	33.1
F 630	mm	DN 100 PN 10	DN 100 PN 10	220	358	340	250	33
	in.	DN 100 PN 10	DN 100 PN 10	8.66	14.09	13.39	9.84	72.8
F 630	mm	100 ISO-K	100 ISO-K	220	358	340	250	32
	in.	100 ISO-K	100 ISO-K	8.66	14.09	13.39	9.84	70.6

Dimensional drawing for the dust filters F 16-25 to F 630

Metal Filter Cartridge

- 0.08 mm (0.003 in.) mesh
- Collects solid particles down to 0.08 mm (0.003 in.) (plastics, paper, packaging materials, foodstuffs)

Activated Charcoal Cartridge

- Absorbs vapors of high molecular weight (solvent and acid vapors, alkaline solutions etc.)

Technical Notes

We recommend installing the filters horizontally on a 90° bend. This will prevent separated particles from falling into the intake line when disassembling the filter.

When using an activated charcoal filter it is recommended to also install a paper cartridge filter between the pump and the activated charcoal.

Technical Data

Dust Filter

Dust Filter	Paper Cartridge	Polyester Filter Cartridge	Metal Cartridge	Active Charcoal Cartridge
Pumping speed reduction through a clean filter	2%	2%	1%	2%
Efficiency for 5 µm particles	98%	98%	–	–

Ordering Information

Dust Filter

	Part No.	Part No.	Part No.	Part No.
Dust Filter	Paper Cartridge	Polyester Filter Cartridge	Metal Cartridge	Active Charcoal Cartridge
F 16-25 for pumps from 10 to 25 m³/h (G 1/2")	**951 50**	**711 27 094**	**711 27 093**	**711 27 092**
Spare cartridge for F 16-25	**710 40 760**	**712 61 288**	**E 710 65 813**	**E 710 65 713**
F 40 for SV 40 B (G 1 1/4")	**951 55**	**711 27 104**	**711 27 103**	**711 27 102**
Spare cartridge for F 40	**710 46 118**	**712 61 298**	**710 49 083**	**710 49 103**
F 65-100 for SV 65 B, SV 100 B (G 1 1/4")	**951 60**	**711 27 114**	**711 27 113**	**711 27 112**
Spare cartridge for F 65-100	**712 13 283**	**712 61 308**	**E 712 13 324**	**E 712 13 304**
F 200-300 for SV 200, SV 300 B (G 2")	**951 65**	**711 27 124**	**711 27 123**	**711 27 122**
F 200-300 for SV 200, SV 300 B (DN 63 ISO-K)	**951 68**	**711 27 127**	**711 27 126**	**711 27 125**
Spare cartridge for F 200-300 (G 2" or DN 63 ISO-K)	**712 13 293**	**712 61 318**	**712 13 334**	**E 712 13 314**
F 630 for SV 630 (B/F), SV 750 (B/F) (DN 100 PN 10)	**951 71**	**711 27 164**	**711 27 163**	**711 27 162**
F 630 for SV 630 (B/F), SV 750 (B/F) (DN 100 ISO-K)	**951 72**	**711 27 168**	**711 27 167**	**711 27 166**
Spare cartridge for F 630 (DN 100 PN 10 or DN 100 ISO-K)	**710 35 242**	**712 61 508**	**E 710 37 734**	**710 37 724**
Spare Parts				
Set of gaskets for F 16-25 NBR (Buna N)	**714 10 820**	**714 10 820**	**714 10 820**	**714 10 820**
Set of gaskets for F 40 NBR (Buna N)	**714 10 830**	**714 10 830**	**714 10 830**	**714 10 830**
Set of gaskets for F 65-100 NBR (Buna N)	**714 10 840**	**714 10 840**	**714 10 840**	**714 10 840**
Set of gaskets for F 200-300 NBR (Buna N)	**714 10 850**	**714 10 850**	**714 10 850**	**714 10 850**
O-ring gasket for F 630 NBR (Buna N)	**712 41 032**	**712 41 032**	**712 41 032**	**712 41 032**

Only available for purchase in North and South America

Dust Filters F (Suction Side)

SOGEVAC SV 40 with connected F-100 dust filter and different types of filter cartridges

High efficiency F filters are recommended for use at the inlet of SOGEVAC rotary vane vacuum pumps for protection against process contaminants, e.g., fiberglass particles, plastic dusts, resins and food-processing by-products. The filters are available with easily replaceable cartridge elements for particle filtration of dusts and particulates down to one microns, or activated carbon elements for the adsorption of chemical vapor.

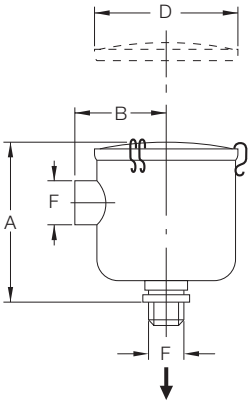

Type		A	B	⌀D	⌀F
F-50	mm	111	76	151	1/2 NPT
	in.	4.38	3.0	15.94	1/2 NPT
F-100	mm	171	107	187	1 1/4 NPT
	in.	6.75	4.19	7.38	1 1/4 NPT
F-200	mm	267	124	222	2 NPT
	in.	10.5	4.88	8.75	2 NPT

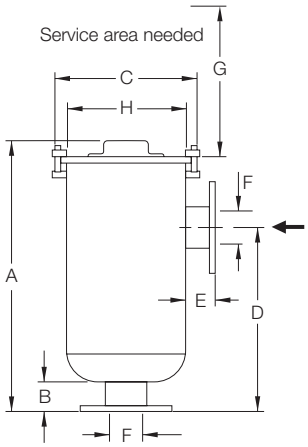

Type		A	B	C	⌀D	E	⌀F	G	H
F-600	mm	689	76	356	470	76	4" ANSI	381	305
	in.	27.13	3.0	14.0	18.5	3.0	4" ANSI	15.0	12.0
F-1200	mm	740	102	483	521	102	6" ANSI	381	406.5
	in.	29.13	4.0	19.0	20.5	4.0	6" ANSI	15.0	16.0

Dimensional drawings for the dust filters F 50 to F 200 (top) and F 600 to F 1200 (bottom)

Technical Data

Dust Filter

Dust Filter	Polyester Filter Cartridge	Metal Cartridge	Paper Cartridge	Active Charcoal Cartridge
New cartridge pumping speed reduction	2%	1%	2%	2%
Efficiency for 1 µm particulates	98%	–	99%	–
Filter for SV 16 (B), SV 25 (B), UV 25	–	–	F-50	–
Filter for SV 40 (B), SV 65 (B), SV 100 (B)	–	F-100	F-100	F-100
Filter for SV 200, 300 B	–	F-200	F-200	F-200
Filter for SV 500 (B), 630 (B/F)	F-600	–	–	–
Filter for SV 1200	F-1200	–	–	–

Ordering Information

Dust Filter

	Part No.	Part No.	Part No.	Part No.
Dust Filter	Polyester Filter Cartridge	Metal Cartridge	Paper Cartridge	Active Charcoal Cartridge
F-50	**–**	**–**	**899 460**	**–**
Replacement element for F-50	**–**	**–**	**E 899 461**	**–**
F-100	**–**	**898 527**	**898 528**	**898 529**
Replacement element for F-100	**–**	**704 44 400**	**704 13 901**	**704 13 906**
F-200	**–**	**898 530**	**898 531**	**898 532**
Replacement element for F-200	**–**	**704 45 400**	**704 14 901**	**704 14 908**
F-600	**898 470**	**–**	**–**	**–**
Replacement element for F-600	**898 471**	**–**	**–**	**–**
F-1200	**898 475**	**–**	**–**	**–**
Replacement element for F-1200	**898 476**	**–**	**–**	**–**

SL Liquid Traps

SOGEVAC SV 40 with SL 40 liquid trap

The SL 16-25 liquid trap consists of a collection vessel made of transparent plastic.

Liquid traps SL 40 to SL 1200 are welded steel collection vessels acting as liquid traps. These are equipped with connecting threads.

Liquid traps SL 630 and SL 1200 are equipped with a cleaning port DN 150 PN 10.

Advantages to the User

- Protection of the pumps against liquids which might condense in the intake or the exhaust line when pumping vapors

Technical Notes

The liquid traps are equipped with a sight glass tube, so that it is easy to determine when to empty the vessels. The liquid drain is sealed by a screw-in cap. This cap may be replaced by a drain valve.

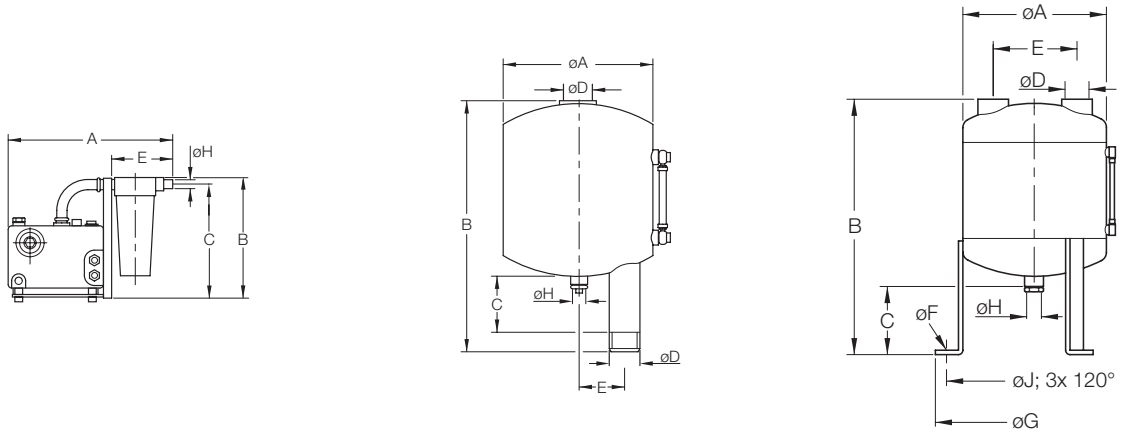

Type		A	⌀A	B	C	⌀D	E	⌀F	⌀G	⌀J	⌀H
SL 16-25	mm	465	–	347	327	–	202	–	–	–	25
	in.	18.31	–	13.66	12.87	–	7.95	–	–	–	0.98
SL 40	mm	–	200	350	100	G 1 1/4"	60	–	–	–	G 1/2"
	in.	–	7.87	13.78	3.94	G 1 1/4"	2.36	–	–	–	G 1/2"
SL 65-100	mm	–	300	510	150	G 1 1/4"	170	12	400	360	G 1/2"
	in.	–	11.81	20.08	5.91	G 1 1/4"	6.69	0.47	15.75	14.17	G 1/2"
SL 200-300	mm	–	300	865	150	G 2"	170	12	400	360	G 1/2"
	in.	–	11.81	34.06	5.91	G 2"	6.69	0.47	15.75	14.17	G 1/2"
SL 630	mm	–	550	900	210	DN100 PN10	300	9	600	514	G 1 1/4"
	in.	–	21.65	35.43	8.27	DN100 PN10	11.81	0.35	23.62	20.24	G 1 1/4"
SL 1200	mm	–	550	900	133	DN125 PN10	300	9	600	514	G 1 1/4"
	in.	–	21.65	35.43	5.24	DN125 PN10	11.81	0.35	23.62	20.24	G 1 1/4"

Dimensional drawings for the liquid traps; SL 16-25 (left), SL 40 (middle) and SL 65-100 up to SL 1200 (right)

Technical Data

		Liquid Traps		
		SL 16-25	SL 40	SL 65-100
For pump	SOGEVAC	for Pumps from 10 to 25 m³/h	SV 40 B	SV 40 B/65 B/100 B
Condensate capacity	l (qt)	2.0 (2.1)	4.0 (4.2)	16.0 (16.9)
Weight	kg (lbs)	3.5 (7.7)	5.0 (11.0)	11.0 (24.3)

Ordering Information

	Liquid Traps		
	SL 16-25	SL 40	SL 65-100
	Part No.	**Part No.**	**Part No.**
Liquid trap	**951 38**	**951 40**	**951 42**
Liquid trap with electrical level switch	**–**	**–**	**951 429 901**
Drain valve	**–**	**711 30 111**	**711 30 113**

Technical Data

		Liquid Traps		
		SL 200-300	SL 630	SL 1200
For pump	SOGEVAC	SV 200/300 B	SV 500/630/750 (B)(F)	SV 500/630/750 (B)(F)
Condensate capacity	l (qt)	40.0 (42.3)	80.0 (84.6)	80.0 (84.6)
Weight	kg (lbs)	17.0 (37.5)	58.0 (127.9)	59.0 (130.1)

Ordering Information

	Liquid Traps		
	SL 200-300	SL 630	SL 1200
	Part No.	**Part No.**	**Part No.**
Liquid trap	**951 44**	**951 47**	**951 48**
Liquid trap with electrical level switch	**951 449 900 001**	**–**	**–**
Drain valve		**711 30 105**	**711 30 105**
Double spigot for drain valve	**–**	**711 18 033**	**711 18 033**

Only available for purchase in North and South America

Ordering Information

	Liquid Traps		
	SL 16-25	SL 40	SL 65-100
	Part No.	**Part No.**	**Part No.**
Liquid trap	**951 38 (BSP)**	**951 40 (NPT)**	**951 43 (NPT)**
Liquid trap with electrical level switch	**–**	**–**	**951 429 901**
Drain valve	**–**	**711 30 111**	**711 30 113**

Ordering Information

	Liquid Traps		
	SL 200-300	SL 630	SL 1200
	Part No.	**Part No.**	**Part No.**
Liquid trap	**951 45 (NPT)**	**951 47 (BSP)**	**951 48 (BSP)**
Liquid trap with electrical level switch	**951 449 900 001**	**–**	**–**
Drain valve		**711 30 105**	**711 30 105**
Double spigot for drain valve	**–**	**711 18 033**	**711 18 033**

Gas Ballast Valve

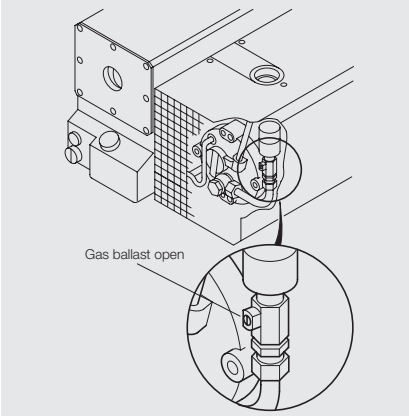

The pumps SOGEVAC SV 10 B, SV 16 B and SV 25 B are equipped depending of their Part No. without or with a permanent gas ballast.

The pumps SOGEVAC SV 16, SV 25, SV 40 B, SV 65 B, SV 100 B, SV 500 B(F), SV 630 B(F) and SV 750 B(F) are equipped depending of their Part No. without or with a manual, permanent or solenoid gas ballast.

The gas ballast valve may also easily be retrofitted to the SV 40, SV 65, SV 100, SV 200 and SV 300 (either standard, large or solenoid).

Technical Notes

The gas ballast valve permits pumping of condensable vapors.

The permissible quantities of water are stated in the technical data section.

Thermal Switch

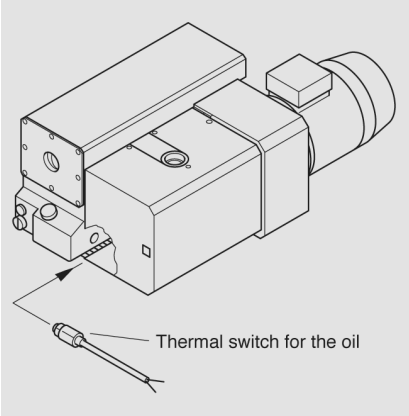

The thermal switch is installed at the hottest point of the pump module. It responds as soon as the temperature of the pump exceeds the maximum operating temperature. This accessory is recommended when operating the pump at high ambient temperatures.

Ratings for the normally closed contact:
25 V AC, 50 Hz – 5 A
60 V DC – 3 A

The SV 500, SV 630 and SV 750 B(F) include this switch as a standard.

Ordering Information

Accessories

	Part No.	Part No.	Part No.	Part No.
For pump SOGEVAC	SV 16 (B)/25	SV 25 B	SV 28 BI	SV 40 B
Gas ballast valve (standard)	integrated	integrated	**971 462 640**	[2]
Thermal switch	–	[2]	**upon request**	[3]
Oil level monitor	**711 19 108**	[2]	**–**	**711 19 110**
Gas ballast big	**–**	[2] [5]	**–**	[4]
Gas ballast, electromagnetic with 24 V DC valve	**–**	**–**	**upon request**	**upon request**
Exhaust filter monitoring switch	**–**	**–**	**–**	**971 425 890**

Ordering Information

Accessories

	Part No.	Part No.	Part No.	Part No.
For pump SOGEVAC	SV 40 BI	SV 65 B	SV 100/120 B	SV 200 [3], [8]
Gas ballast valve (standard)	[1]	[1]	[1]	**951 29**
Thermal switch	[3]	[3]	[3]	**951 36**
Oil level monitor	**711 19 110**	**711 19 110**	**711 19 110**	**953 96**
Gas ballast, big	**–**	[6]	[7]	**951 30**
Gas ballast, electromagnetic with 24 V DC valve	**upon request**	**upon request**	**upon request**	**951 31**
Exhaust filter monitoring switch	**971 425 890**	**971 425 890**	**971 425 890**	**712 22 360**

Ordering Information

Accessories

	Part No.	Part No.
For pump SOGEVAC	SV 300 B	SV 630 B(F), SV 750 B(F) [3], [8]
Gas ballast valve (standard)	**971 464 130** [9]	integrated (24 V DC)
Thermal switch	**971 463 930**	integrated
Oil level monitor	**upon request**	**971 425 760**
Gas ballast kit	**971 464 130** [9]	**–**
Gas ballast, electromagnetic with 24 V DC valve	**upon request**	**971 438 170**
Exhaust filter monitoring switch	**upon request**	**712 22 360**

[1] According to variant
[2] Can not be retrofitted
[3] Please state when ordering the pump
[4] See pump with Part No. 960 305 V 2040
[5] See pump with Part No. 960 251 V 2040
[6] See pump with Part No. 960 405 V 0040
[7] See pump with Part No. 960 505 V 2040
[8] Second gas ballast possible. Contact Leybold
[9] SV 300 B gas ballast kit (Part No. 971 464 130) includes all parts for small, standard and big gas flow

Mobile Base Frame

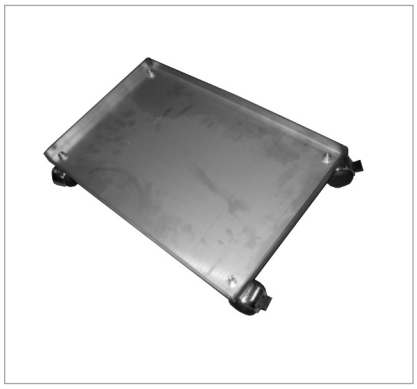

Mobile base frame

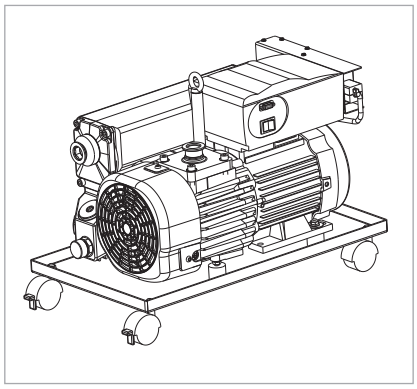

SOGEVAC pump upon mobile base frame

The mobile base frame allows moving easily single and double stage rotary vane pumps up to 65 m³/h and facilitates therefore their maintenance.

The oil tight base frame allows to hold up to 2 l (2,1 qt) oil and has swivable casters of which 2 have breaks.

The base frame doesn't alter the pump noise and facilitates oil draining and pump displacement.

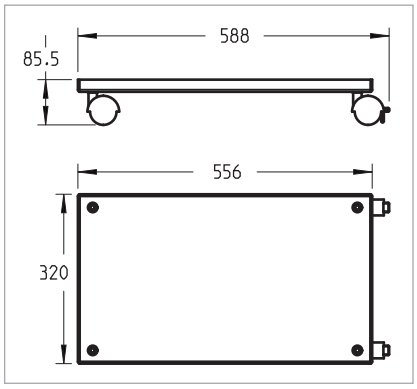

Dimensional drawing for the mobile base frame

Technical Data

Mobile Base Frame

Net weight, approx..	kg (lbs)	3 (7)
Max. load	kg (lbs)	90 (200)
Oil recovery volume, max.	l (qt)	2 (2.1)
Caster diameter	mm (in)	50 (2)
Material oil pan		Stainless steel

Ordering Information

Mobile Base Frame

		Part No
For Pump	SOGEVAC	Single and double stage pumps up to 65 m³/h
Mobile base frame		**960 331 BASE**

Noise Enclosure

Leybold has developed a specific noise enclosure for vacuum pumps, which reduce the noise level by approx. 5 dB(A) and which makes sure the pump doesn't overheat due to the open design on both sides.

A combination with the mobile base frame is possible.

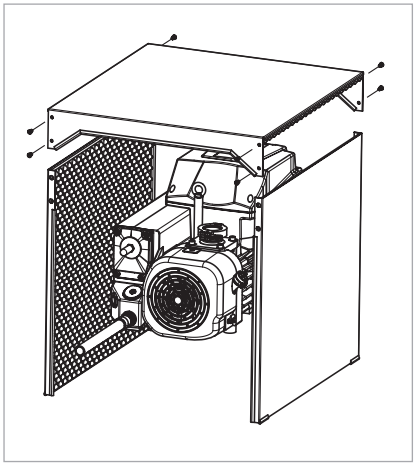

Noise enclosure

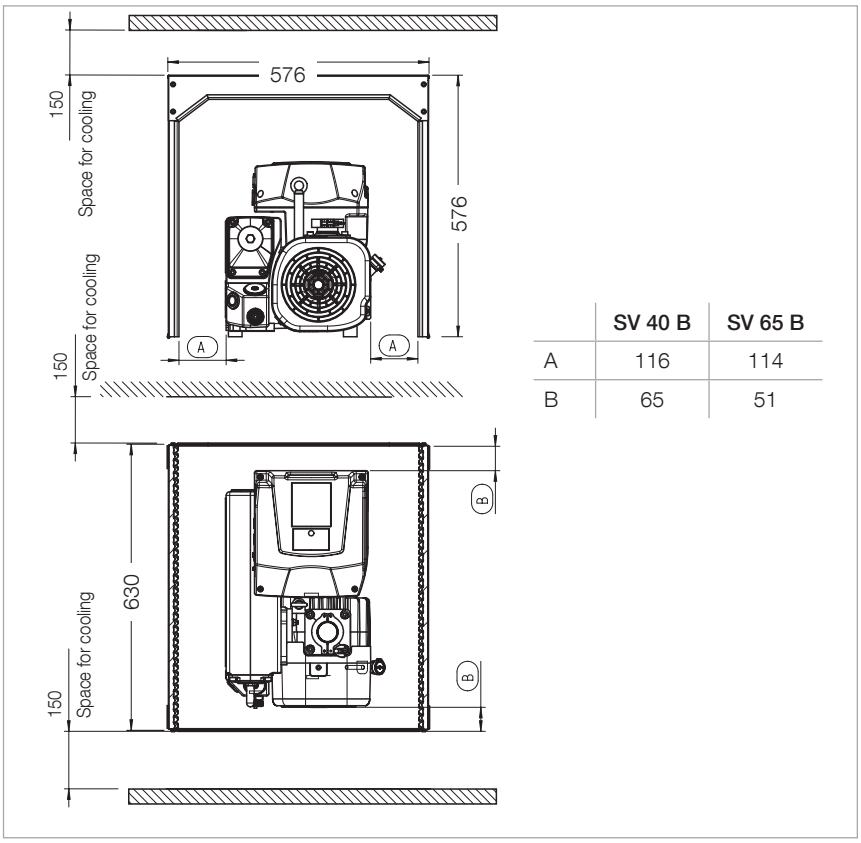

	SV 40 B	SV 65 B
A	116	114
B	65	51

Dimensional drawing for the noise enclosure, dimensions in mm

Technical Data

Noise Enclosure

Net weight, approx.	**kg (lbs)**	12.2 (27)
Noise reduction, approx..	**dB(A)**	5
Temperature increase below top, max.	**°C (°F)**	7 (45)
Ambient temperature , max.	**°C (°F)**	34 (93)
Material		
frame		Galvanised steel
absorption foam material		acc. UL-94 HF1

Ordering Information

Noise Enclosure

		Part No.	Part No.
For pump	SOGEVAC	Single stage rotary vane pumps up to 65 m³/h and double stage rotary vane pumps up to 25 m³/h –	– Single stage rotary vane pumps up to 120 m³/h and double stage rotary vane pumps up to 65 m³/h
Noise enclosure		**960 331 NENC**	**960 560 NENC**

Mounting Accessories

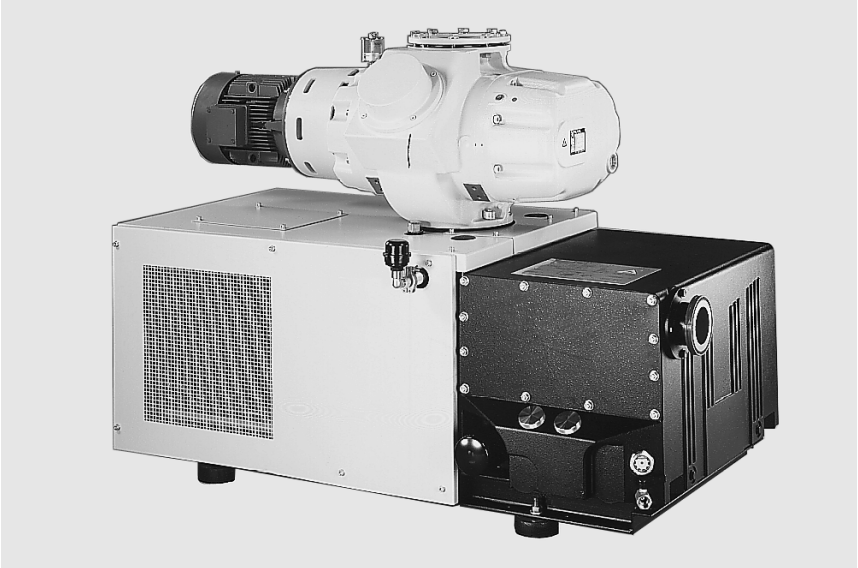

SOGEVAC SV 630 F with RUVAC WAU 2001

SOGEVAC SV 200 with RUVAC WAU 501

Ordering Information

Mounting Accessories

	Part No.	Part No.	Part No.	Part No.	Part No.
For pump SOGEVAC	SV 16 BI	SV 25 B	SV 28 BI	SV 40 B	SV 40 BI
Oil drain valve G 3/4"		**711 30 114**	**711 30 114**	**711 30 114**	**711 30 114**
Base frame for Roots installation	not possible				

Ordering Information

Mounting Accessories

	Part No.	Part No.	Part No.	Part No.
For pump SOGEVAC	SV 40/65 B	SV 100 B	SV 200	SV 300 B
Base frame	**971 453 840**	**971 434 000**	**711 19 208**	**711 19 208**
Oil drain valve G 3/4"	**711 30 114**	**711 30 114**	**711 30 114**	**711 30 114**
Bracket for electric connections	**–**	**–**	**711 19 226**	**upon request**
Base frame for Roots installation	not possible	**971 448 830** [1]	**711 19 209** [2]	**971 456 590**

[1] Mandatory for direct Roots mounting
[2] Required for mounting the WAU 1001 on to the SV 200

Exhaust Filter Gauge

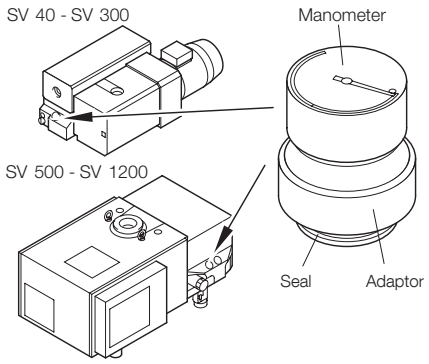

The manometer (40 mm (1.58 in.) dia.), glued in the adapter, is installed instead of the oil filling plug. Dial has 2 colors:

green: 1000 < p < 1450 mbar abs.
(760 < p< 1090 Torr abs.)
Exhaust filter OK

red: p > 1450 mbar abs.
(> 1090 Torr abs.)
Exhaust filter clogged

Technical Notes

The reliability of the manometer applies only provided the pump has attained its operating temperature and when the intake pressure is high.

Ordering Information

Exhaust Filter Gauge

	Part No.	Part No.
For pump SOGEVAC	SV 10 B to SV 25 B, SV 28 BI	SV 40 B(I) to SV 750 B(F)
Manometer (with adaptor and seal)	**951 93**	**951 94**

[1] Not visible from outside

Single Phase Power Supply Cables

Ordering Information

Part No.	Plug pump side	Plug supply side	Length in m
971457EUR	Hirschmann	Euro / Schuko 16 A	2.5
971457GB	Hirschmann	UK plug 13 A	2.5
971457NEMA	Hirschmann	NEMA 6-15P 250 V	2.5
971457CH	Hirschmann	CH plug 10 A	2.5
971457WW	Hirschmann	w/o	2.5
EK6506966	Hirschmann	IEC 309 16 A	5
EK6510715	Hirschmann	C20	2.5
EK6510720	Hirschmann	C14	2.5
141103US	C19	NEMA 5-15P 125 V	1.8
161810US	C19	NEMA 6-15P 250 V	1.8
161810EU	C19	Euro / Schuko 16 A	1.8
161810UK	C19	UK plug 13 A	1.8
161810CN	C19	China Australia type I	1.8
E6500825	C19	C20	2.5
E6505883	C19	IEC 309 16 A	5
EK6502798	C19	C14	2.5
971443450	C13	Euro / Schuko 16 A	2
EK6508756	C13	NEMA 6-15P 250 V	2
6534485V	C13	NEMA 5-15P 125 V	
9714434GB	C13	UK plug 13 A	2
9714434CH	C13	CH plug 10 A	2
9714434WW	C13	w/o	2
E6500255	C13	C14	2.5
EK6701862	C13	C20	0.2

Notes

Ball Valves and Valves

Ball valve 1 1/4"

Advantages to the User

- Leak rate < 1 x 10^{-6} mbar x l/s (≤ 0.75 x 10^{-6} Torr x l x s^{-1})
- Seals on both sides against the atmosphere
- Opens against atmospheric pressure
- Small size
- Simple and quick to operate
- Pressure range from 10^{-2} to 1000 mbar (0.75 x 10^{-2} to 750 Torr)
- Smaller models serve as venting valves

Information on the blocking components is provided in the Catalog Part “Vacuum Valves”.

Material

The housing of the ball valves is made of brass, the ball of hard-chrome plated brass, the valve seat of PTFE.

The housing of the right angle valve is made of aluminium, the spindle and valve plate are sealed with an O-ring and are made of stainless steel.

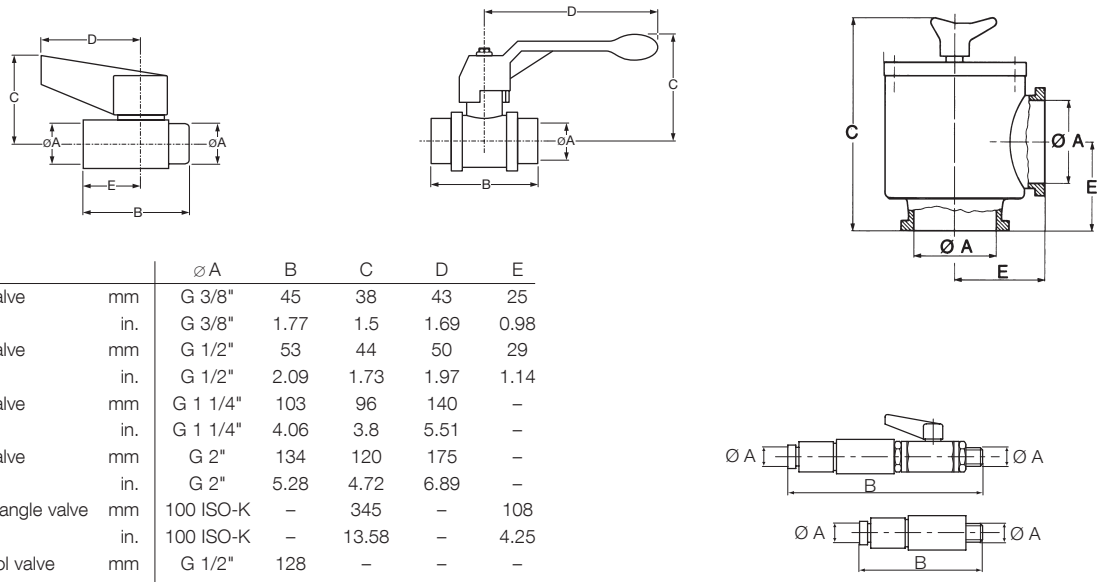

Type		⌀ A	B	C	D	E
Ball valve	mm	G 3/8"	45	38	43	25
	in.	G 3/8"	1.77	1.5	1.69	0.98
Ball valve	mm	G 1/2"	53	44	50	29
	in.	G 1/2"	2.09	1.73	1.97	1.14
Ball valve	mm	G 1 1/4"	103	96	140	–
	in.	G 1 1/4"	4.06	3.8	5.51	–
Ball valve	mm	G 2"	134	120	175	–
	in.	G 2"	5.28	4.72	6.89	–
Right-angle valve	mm	100 ISO-K	–	345	–	108
	in.	100 ISO-K	–	13.58	–	4.25
Control valve	mm	G 1/2"	128	–	–	–
	in.	G 1/2"	5.04	–	–	–
Control valve with	mm	G 1/2"	175	–	–	–
blocking valve	in.	G 1/2"	6.89	–	–	–

Dimensional drawings for the ball valves; G 3/8" and G 1/2" (left), G 1 1/4" and G 2" (middle), right-angle valves (right) and for the control valves (bottom)

Technical Data

Ball Valves and Valves [1)]

Type		Ball valve	Ball valve	Ball valve	Ball valve
Connection		F/M 3/8" BSP	F/M 1/2" BSP	F/F 1 1/4" BSP	F/F 2» BSP
Weight	kg (lbs)	0.12 (0.3)	0.15 (0.33)	1.24 (2.7)	3.22 (7.1)

Ordering Information

Ball Valves and Valves [1)]

	Part No.	Part No.	Part No.	Part No.
Type	Ball valve	Ball valve	Ball valve	Ball valve
	971 471 220	**711 30 113**	**711 30 100**	**711 30 107**

[1)] Special versions for oxygen applications are available upon request

Only available for purchase in North and South America

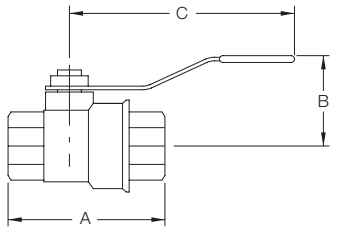

Type		⌀A	B	C
BV50	mm	54	41	102
	in.	2.13	1.63	4.0
BV100	mm	102	67	140
	in.	4.0	2.63	5.5

Dimensional drawing for the ball valves BV

Technical Data

Ball Valves

Type	Ball valve	Ball valve
Connection	1/2-inch NPT(F)	1 1/4-inch NPT(F)

Ordering Information

Ball Valves

	Part No.	Part No.
Type	BV50	BV100
	899 810	**899 800**

Bourdon Vacuum Gauges / DIAVAC DV 1000

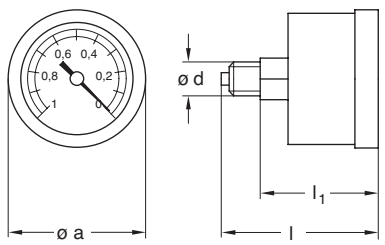

	a	d	l	l_1
mm	40	G 1/8"	48	36
in.	1.57	G 1/8"	1.89	1.42

Dimensional drawing for the
Bourdon vacuum gauge Part No. 951 90

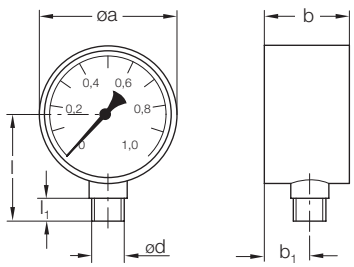

	a	b	b_1	d	l	l_1
mm	90	55	30	G 1/2"	70	15
in.	3.54	2.17	1.18	G 1/2"	2.76	0.59

Dimensional drawing for the
Bourdon vacuum gauge Part No. 951 92

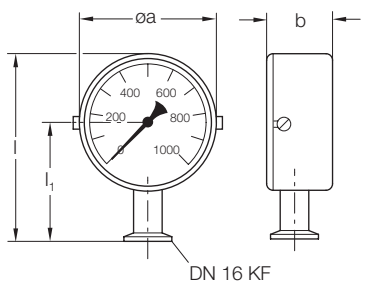

	a	b	l	l_1
mm	80	36	105	64
in.	3.15	1.42	4.13	2.52

Dimensional drawing for the
Bourdon vacuum gauge Part No. 160 40

DIAVAC DV 1000

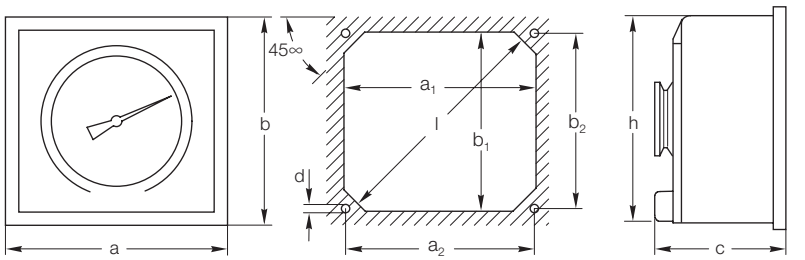

	a	a_1	a_2	b	b_1	b_2	c	d	h	l
mm	180	170	166	166	156	152	166	4.5	155	203.5
in.	7.09	6.69	6.54	6.54	6.14	5.98	6.54	0.18	6.10	8.01

Dimensional drawing and panel cut-out for the DIAVAC DV 1000, Part No. 160 67

Advantages to the User

- Simple, rugged and vibration insensitive vacuum gauges for the rough vacuum range
- Linear response
- Clear dial which can also be read from a great distance
- Readings independent of atmospheric pressure

Technical Data — Bourdon Vacuum Gauges / DIAVAC DV 1000

Measuring range		0 to 100%	0 to 1 bar	0 to 1020 mbar	1 to 1000 mbar
Vacuum connection		M 1/8" BSP	M 1/2" BSP	DN 16 ISO-KF	DN 40 ISO-KF
Scale length	**mm (in.)**	55 (2.17)	140 (5.51)	140 (5.51)	270 (10.63
Overall height	**mm (in.)**	48 (1.89)	115 (4.53)	105 (4.13)	166 (6.54)
Weight	**g (lbs)**	60 (0.13)	560 (1.24)	300 (0.66)	2700 (5.96)
Indication		low pressure in bar	absolute pressure in mbar	absolute pressure in mbar	absolute pressure in mbar

Ordering Information — Bourdon Vacuum Gauges / DIAVAC DV 1000

	Part No.	**Part No.**	**Part No.**	**Part No.**
Bourdon Vacuum Gauges	**951 90**	**951 92**	**160 40**	**–**
DIAVAC DV 1000	**–**	**–**		**711 30 107**

Standard vacuum gauge for all SOGEVAC pumps is Part No. 951 92.
Further information on other vacuum gauges is provided in Catalog Part "Vacuum Measuring, Controlling"

Only available for purchase in North and South America

Other Accessories

External Carbon Exhaust Filters

An external type spin-on filter made of activated carbon on a polyester cloth housed in wire mesh. Used for providing additional protection from oil odor or mist expelled from pump exhaust.
Requires NPT type nipple and street elbow for preferred vertical mounting. SV 16/25 requires nipple only.

Technical Data — External Carbon Exhaust Filters

Model		**SVXCXF 50**	**SVXCXF 100**	**SVXCXF 200**
Fits pump	**SOGEVAC**	SV 16 / 25 (B)	SV 40 B / 65 B / SV 100 B	SV 200/300
Thread size		1/2" NPT-M	1 1/4" NPT-M	2" NPT-M

Ordering Information — External Carbon Exhaust Filters

	Part No.	**Part No.**	**Part No.**
Model	SVXCXF 50	SVXCXF 100	SVXCXF 200
External carbon exhaust filters	**899 502**	**899 500**	**899 498**
Replacement element	**899 503**	**899 501**	**899 499**

Connection Fittings for SOGEVAC SV 10 B, SV 16, SV 16 B, SV 16 D, SV 25, SV 25 B, SV 25 D

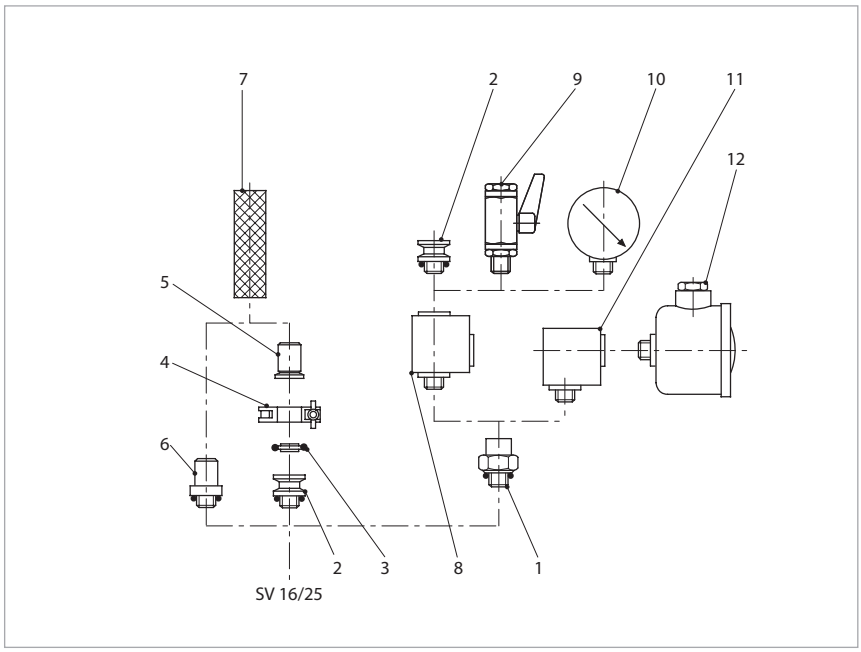

Connection fittings for SOGEVAC SV 10 B, SV 16 B, SV 25 B and SV 16, SV 25

The fittings presented have been specially matched to the SOGEVAC pumps. We recommend to use only these
or other components from Leybold for connecting SOGEVAC pumps, so as not to impair the pumping speed of the pumps or the leak tightness of the system.

More information on further fittings is provided in Catalog Part “Flanges and Fittings”.

Technical Data

Connection Fittings

Item	Description	Connection	Material
1	Screw coupling	G 1/2" M/F	Aluminium
2	Threaded flange adaptor [1]	G 1/2" M – DN 16 ISO-KF	Aluminium, anodized
3	Centering ring [1]	DN 16 ISO-KF	Aluminium
4	Clamping ring	DN 10/16 ISO-KF	Aluminium
5	Hose connection	DN 16 ISO-KF – DN 25 mm (0.39 in.)	Aluminium, anodized
6	Hose connection [1]	G 1/2“ M – DN 25 mm (0.39 in.)	Aluminium, anodized
7	PVC tubing	5 mm (0.39 in.) dia., 1 m (3.5 ft) long	PVC
8	Tee piece	G 1/2"M/F/F	Aluminium, anodized
9	Ball valve	G 1/2" M/F	Brass, nickeled
10	Bourdon vacuum gauge	G 1/2" M	
11	Elbow 90°	G 1/2" M/F	Aluminium, anodized
12	Dust filter	G 1/2" M/F	
13	Inlet reduction [1] (not shown)	G 1/2" F – G 3/4" M	galvanised steel

[1] With NBR-O-Ring

M = Outside thread
F = Inside thread

Ordering Information

		Connection Fittings		
		SV 10 B	SV 16, 16 B, 16 D	SV 25, 25 B, 25 D
		Part No.	Part No.	Part No.
Item	Description			
1	Screw coupling	711 18 020	711 18 020	711 18 020
2	Threaded flange adaptor [1]	711 18 120	711 18 120	711 18 120
3	Centering ring [1]	183 26	183 26	183 26
4	Clamping ring	183 41	183 41	183 41
5	Hose connection	711 18 300	711 18 300	711 18 300
6	Hose connection [1]	711 18 011	711 18 011	711 18 011
7	PVC tubing	711 18 323	711 18 323	711 18 323
8	Tee piece	711 18 250	711 18 250	711 18 250
9	Ball valve	711 30 113	711 30 113	711 30 113
10	Bourdon vacuum gauge	951 92	951 92	951 92
11	Elbow 90°	711 18 210	711 18 210	711 18 210
12	Dust filter [2] with paper cartridge with activated charcoal cartridge with metal cartridge with polyester filter cartridge	 951 50 711 27 092 711 27 093 711 27 094	 951 50 711 27 092 711 27 093 711 27 094	 951 50 711 27 092 711 27 093 711 27 094
13	Inlet reduction [1] (not shown)	951 24	951 24	951 24

Special versions for oxygen applications are available upon request

[1] With NBR-O-Ring
[2] See “Dust Filters F (Suction Side)” for other options

Connection Fittings for SOGEVAC SV 40 B, SV 65 B, SV 100 B

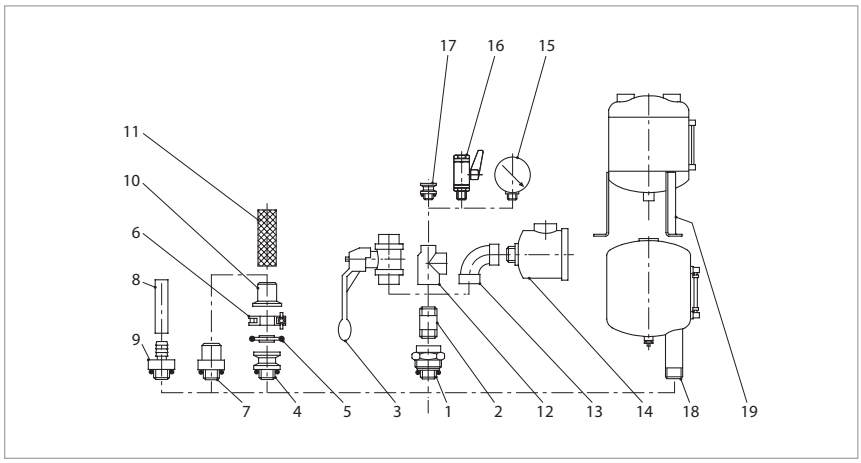

Connection fittings for SOGEVAC SV 40 B, SV 65 B, SV 100 B

Technical Data

Connection Fittings

Item	Description	Connection	Material
1	Screw coupling	G 1 1/4" M/F	Aluminium, NBR
2	Double nipple	G 1 1/4" M/M	Steel
3	Ball valve	G 1 1/4" F/F	Brass, nickeled
4	Threaded flange adaptor [1]	G 1 1/4" M – DN 40 ISO-KF	Aluminium, anodized
5	Centering ring	DN 40 ISO-KF	Aluminium
6	Clamping ring	DN 32/40 ISO-KF	Aluminium
7	Hose connection [1]	G 1 1/4“ M / DN 40 mm (1.58 in.)	Aluminium, anodized
8	Rubber hose	dia 10 x 25 mm (0.39 x 0.98 in.), 1 m (3.5 ft) long	
9	Hose connection [1]	G 1 1/4" M – DN 10	Aluminium, anodized
10	Hose connection	DN 40 ISO-KF/DN 40 mm	Aluminium, anodized
11	PVC tubing	DN 40 ISO-KF/DN 40 mm (1.58 in.)	
12	Tee reducer bush	G 1 1/4" – 1 1/4" – 1/2" F/F/F	Gray cast iron
13	Elbow 90°	G 1 1/4" F/F	Gray cast iron
14	Dust filter	G 1 1/4" M/F	
15	Bourdon vacuum gauge	G 1/2" M	
16	Ball valve	G 1/2" M/F	Brass, nickeled
17	Threaded flange adaptor [1]	G 1/2" M – DN 16 ISO-KF	Aluminium, anodized
18	Liquid trap	G 1 1/4" – 1 1/4" – 3/8" M/F	
19	Liquid trap	G 1 1/4" – 1 1/4" – 1/2" F/F/F	

[1] inkl. O-Ring

M = Outside thread
F =Inside thread

Ordering Information

Connection Fittings

		SV 40 B	SV 65 B	SV 100 B
		Part No.	Part No.	Part No.
Item	Description			
1	Screw coupling	711 18 023	711 18 023	711 18 023
2	Double nipple	711 18 033	711 18 033	711 18 033
3	Ball valve	711 30 105	711 30 105	711 30 105
4	Threaded flange adaptor [1]	711 18 123	711 18 123	711 18 123
5	Centering ring	183 28	183 28	183 28
6	Clamping ring	183 43	183 43	183 43
7	Hose connection [1]	711 18 013	711 18 013	711 18 013
8	Rubber hose	172 03	172 03	172 03
9	Hose connection [1]	711 18 153	711 18 153	711 18 153
10	Hose connection	711 18 303	711 18 303	711 18 303
11	PVC tubing	711 18 324	711 18 324	711 18 324
12	Tee reducer bush	711 18 263	711 18 263	711 18 263
13	Elbow 90°	711 18 213	711 18 213	711 18 213
14	Dust filter			
	with paper cartridge	951 55	951 55	951 55
	with activated charcoal cartridge	711 27 102	711 27 102	711 27 102
	with metal cartridge	711 27 103	711 27 103	711 27 103
	with polyester filter cartridge	711 27 104	711 27 104	711 27 104
15	Bourdon vacuum gauge	951 92	951 92	951 92
16	Ball valve	711 30 113	711 30 113	711 30 113
17	Threaded flange adaptor [1]	711 18 120	711 18 120	711 18 120
18	Liquid trap	951 40	–	–
19	Liquid trap	951 42	951 42	951 42

Special versions for oxygen applications are available upon request

[1] With NBR-O-Ring
[2] See “Dust Filters F (Suction Side)” for other options

Connection Fittings for SOGEVAC SV 200, SV 300 B / SV 320 B

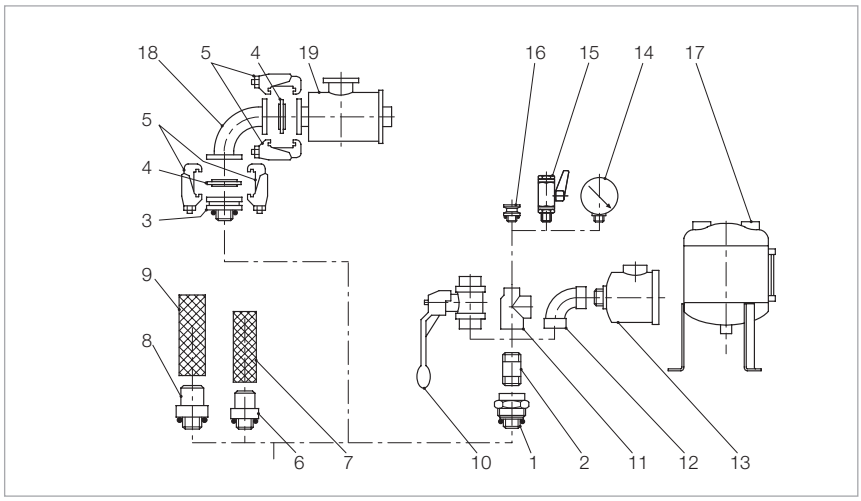

Connection fittings for SOGEVAC SV 200 and SV 300 / SV 320 B

Technical Data

Connection Fittings

Item	Description	Connection	Material
1	Screw coupling	G 2" M/F	Aluminium, anodized
2	Double nipple	G 2“ M/M – 150 mm (5.9 in.)	Steel
3	Threaded flange adaptor [1]	G 2" M – DN 63 ISO-K	Steel, zinc coated
4	Centering ring mit Außenring [1]	DN 63 ISO-K	Aluminium, CR
5	Set of clamping screws DN ISO-K (4 pieces)	M10 x 24	Steel, zinc coated
6	Hose connection [1]	G 2“ M – DN 50 mm (1.97 in.)	Aluminium, anodized
7	PVC tubing)	⌀ 50 mm (1.97 in.), 1 m (3.5 ft) long	PVC
8	Hose connection [1]	G 2“ M – DN 60 mm (2.36 in.)	Aluminium, anodized
9	PVC tubing	⌀ 60 mm (2.36 in.), 1 m (3.5 ft) long	PVC
10	Ball valve	G 2" F/F	Brass, nickeled
11	Tee reducer	G 2" – 2" – 1/2" F/F/F	Gray cast iron
12	Elbow 90°	G 2" F/F	Gray cast iron
13	Dust filter	G 2" M/F	
14	Bourdon vacuum gauge	G 1/2" M	
15	Ball valve	G 1/2" M/F	Brass, nickeled/Aluminium
16	Threaded ISO-KF small-flange adapto[1]	G 1/2" M – DN 16 ISO-KF	Aluminium, anodized
17	Liquid trap	G 2" – 2" – 1/2" F/F/F	
18	Elbow 90°	DN 63 ISO-K	Stainless steel
19	Dust filter with paper cartridge	DN 63 ISO-K	

[1] inkl. O-Ring

M = Outside thread
F =Inside thread

Ordering Information

Connection Fittings

		SV 200	SV 300 B	SV 320 B
		Part No.	Part No.	Part No.
Item	Description			
1	Screw coupling	711 18 025	711 18 025	711 18 025
2	Double nipple	11 18 035	711 18 035	711 18 035
3	Threaded flange adaptor [1]	711 18 126	711 18 126	711 18 126
4	Centering ring mit Außenring [1]	268 05	268 05	268 05
5	Set of clamping screws DN ISO-K (4 pieces)	267 01	267 01	267 01
6	Hose connection [1]	711 18 015	711 18 015	711 18 015
7	PVC tubing)	711 18 325	711 18 325	711 18 325
8	Hose connection [1]	711 18 016	711 18 016	711 18 016
9	PVC tubing	711 18 326	711 18 326	711 18 326
10	Ball valve	711 30 107	711 30 107	711 30 107
11	Tee reducer	711 18 265	711 18 265	711 18 265
12	Elbow 90°	711 18 215	711 18 215	711 18 215
13	Dust filter with paper cartridge with activated charcoal cartridge with metal cartridge with polyester filter cartridge	 951 65 711 27 122 711 27 123 711 27 124	 951 65 711 27 122 711 27 123 711 27 124	 951 65 711 27 122 711 27 123 711 27 124
14	Bourdon vacuum gauge	951 92	951 92	951 92
15	Ball valve	711 30 113	711 30 113	711 30 113
16	Threaded ISO-KF small-flange adapto [1]	711 18 120	711 18 120	711 18 120
17	Liquid trap	951 44	951 44	951 44
18	Elbow 90°	887 25	887 25	887 25
19	Dust filter with paper cartridge	951 68	951 68	951 68

Special versions for oxygen applications are available upon request

[1] With NBR-O-Ring
[2] See “Dust Filters F (Suction Side)” for other options

Connection Fittings for SOGEVAC SV 470 B(F), SV 570 B(F)

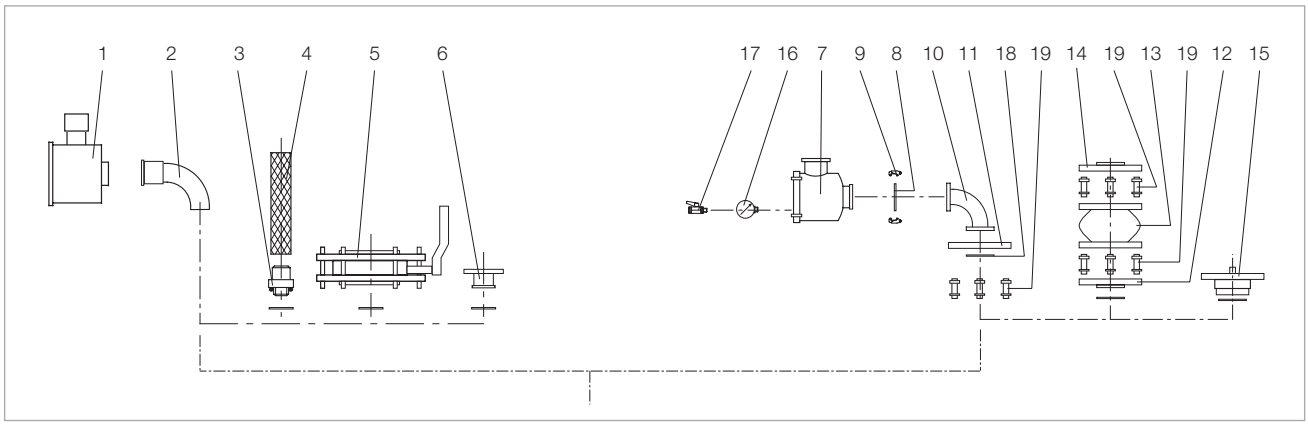

Connection fittings for SOGEVAC SV 470 B(F), SV 570 B(F)

Technical Data

Connection Fittings

Item	Description	Connection	Material
1	Dust filter with paper cartridge with metal cartridge with activated charcoal cartridge	G3" F/M	Steel, zinc coated
2	Elbow 90°	G3" M/F	Cast iron, painted
3	Adapter	G3" M – DN 90	Steel, painted
4	PVC tubing	∅ 90 mm, 1 m long	
5	Manual valve	G3" M/F	Cast iron, painted
6	Flange	G3" M – DN 100 ISO-K	Aluminium
7	Dust filter with paper cartridge with metal cartridge with activated charcoal cartridge with polyester filter cartridge	 DN 100 ISO-K DN 100 ISO-K DN 100 ISO-K DN 100 ISO-K	 Steel, painted Steel, painted Steel, painted Steel, painted
8	Centering ring mit O-Ring	DN 100 ISO-K	Stainless steel
9	Set of clamping screws (4 pieces are required)	M10 x 24	Steel, zinc coated
10	Elbow 90°	DN 100 ISO-K	Stainless steel
11	Adaptor flange	DN 100 ISO-K, DIN 2501	Steel, painted
12	Collar flange	DN 100 PN 10 – G3" M	Steel, painted
13	Compensator	DN 100 PN 10	Steel / Rubber
14	Flange	DN 100 PN 10 – G3" F	Steel, painted
15	Double nipple	DN 100 ISO-K / DN 100 PN 10 – G3" M	Steel
16	Filter manometer	G1/2" M	
17	Venting valve	G1/2" M/F	Steel
18	O-ring FPM (FKM)		FPM (FKM)
19	Set of bolts	M16	Steel, zinc coated

M = Outside thread
F =Inside thread

Ordering Information

Connection Fittings

		SV 470 B(F)	SV 570 B(F)
		Part No.	**Part No.**
Item	Description		
1	Dust filter with paper cartridge with metal cartridge with activated charcoal cartridge	 **Upon request** **Upon request** **Upon request**	 **Upon request** **Upon request** **Upon request**
2	Elbow 90°	**9516 223V**	**9516 223V**
3	Adapter	**9516 221V**	**9516 221V**
4	PVC tubing	**711 18 329**	**711 18 329**
5	Manual valve	**9516 225V**	**9516 225V**
6	Flange	**711 18 127**	**711 18 127**
7	Dust filter with paper cartridge with metal cartridge with activated charcoal cartridge with polyester filter cartridge	 **951 72** **711 27 167** **711 27 166** **711 27 168**	 **951 72** **711 27 167** **711 27 166** **711 27 168**
8	Centering ring mit O-Ring [1]	**268 06**	**268 06**
9	Set of clamping screws (4 pieces are required)	 **267 01**	 **267 01**
10	Elbow 90°	**887 26**	**887 26**
11	Adaptor flange	**267 50**	**267 50**
12	Collar flange	**9516 226V**	**9516 226V**
13	Compensator	**711 18 342**	**711 18 342**
14	Flange	**711 18 370**	**711 18 370**
15	Double nipple	**9516 222V**	**9516 222V**
16	Filter manometer	**951 92**	**951 92**
17	Venting valve	**711 30 113**	**711 30 113**
18	O-ring FPM (FKM)	**712 42 892**	**712 42 892**
19	Set of bolts	**714 12 440**	**714 12 440**

Special versions for oxygen applications are available upon request

[1] With NBR O-ring

Connection Fittings for SOGEVAC SV 630 B(F), SV 750 B(F)

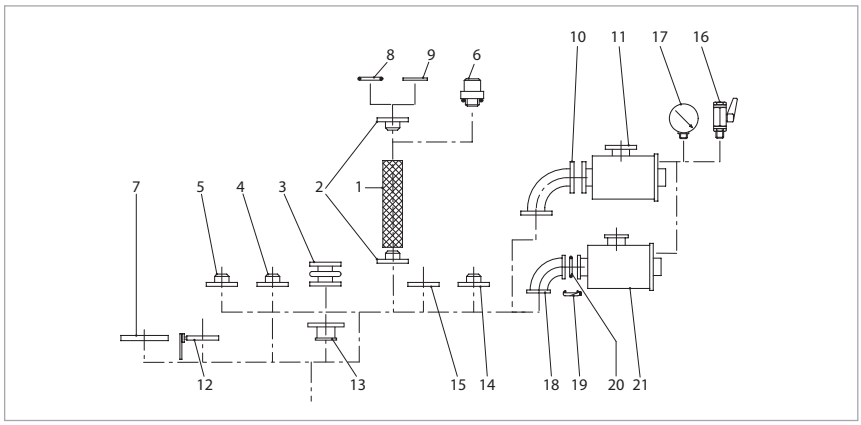

Connection fittings for SOGEVAC SV 630 B(F), SV 750 B(F)

Technical Data

Connection Fittings

Item	Description	Connection	Material
1	PVC tubing	90 mm (3.54 in.) dia., 1 m (3.5 ft) long	
2	Hose connection	DN 100 PN 10 – DN 90 mm (3.54 in.)	Steel
3	Coupling	∅ 100 – PN 10	Stainless steel/Aluminium/Rubber
4	Adaptor flange	DN 100 PN 10 – G 4“ F	Steel
5	Adaptor flange	DN 100 PN 10 – G 3“ F	Steel
6	Adaptor flange	G 4“ M – DN 90	Steel/NBR
7	Adaptor for Roots pump	RUVAC 1001 RUVAC 2001 RUVAC WH4400	Steel/NBR Steel/FPM Steel/FPM
8	O-Ring	dia. 110 x 5 (3.94 x 0.2 in.)	NBR
9	Centering ring wih O-Ring	DN 100 PN 10 – DN 100 ISO-K	Aluminium/NBR
10	Elbow 90°	DN 100 PN 10	Steel
11	Dust filter F 630	DN 100 PN 10	
12	Manually operated blocking valve	DN 100 PN 10	Gray cast iron
13	Adapter	DN 100 PN 10 – 100 ISO-K	Aluminium
14	Adaptor flange with tubulation	DN 100 PN 10 (tube dia. 108 (4.25 in.))	Steel
15	Collar flange	DN 100 PN 10 – DN 100 ISO-K	Steel
16	Ball valve	G 1/2" M/F	Brass, nickeled/Aluminium
17	Bourdon vacuum gauge	G 1/2“ M	
18	Elbow 90°	DN 100 ISO-K	Stainless steel
19	Set of clamps for DN ISO-K Set = 4 pieces	M 10 x 24	Steel, zinc coated
20	Centering ring	DN 100 ISO-K	Aluminium/NBR
21	Dust filter	DN 100 ISO-K	
	Screw set (not drawn) Set = 8 screws and 8 nuts	DN 100 PN 10	Steel, zinc coated

M = Outside thread
F =Inside thread

Ordering Information

Connection Fittings

		SV 630 B(F)	SV 750 B(F)
		Part No.	Part No.
Item	Description		
1	PVC tubing	711 18 329	711 18 329
2	Hose connection	711 18 362	711 18 362
3	Coupling	711 18 342	711 18 342
4	Adaptor flange	711 18 372	711 18 372
5	Adaptor flange	711 18 370	711 18 370
6	Hose connection	711 18 017	711 18 017
7	Adaptor for Roots pump RUVAC 1000 RUVAC 2000 RUVAC WH4400	 971 432 340 971 432 350 971 43 WH4400	 971 432 340 971 432 350 971 43 WH4400
8	O-ring	712 42 882	712 42 882
9	Centerring ring with O-ring	711 18 391	711 18 391
10	Elbow 90°	711 18 284	711 18 284
11	Dust filter F 630 [1] with paper cartridge with activated charcoal cartridge with metal cartridge with polyester filter cartridge	 951 71 711 27 162 711 27 163 711 27 164	 951 71 711 27 162 711 27 163 711 27 164
12	Manually operated blocking valve	711 30 116	711 30 116
13	Adaptor	711 18 336	711 18 336
14	Adaptor flange with tubulation	711 18 351	711 18 351
15	Collar flange	711 18 383	711 18 383
16	Ball valve	711 30 113	711 30 113
17	Bourdon vacuum gauge	951 92	951 92
18	Elbow 90°	887 26	887 26
19	Clamp screws for DN ISO-K Set = 4 pieces	 267 01	 267 01
20	Centering ring [2]	268 06	268 06
21	Dust filter [1] with paper cartridge with activated charcoal cartridge with metal cartridge with polyester cartridge	 951 72 711 27 166 711 27 167 711 27 168	 951 72 711 27 166 711 27 167 711 27 168
	Screw set (not drawn) Set = 8 screws and 8 nuts	 714 12 440	 714 12 440

Special versions for oxygen applications are available upon request

[1] See "Dust Filters F (Suction Side)" for other options
[2] incl. O-ring

Only available for purchase in North and South America

60 Hz Curves

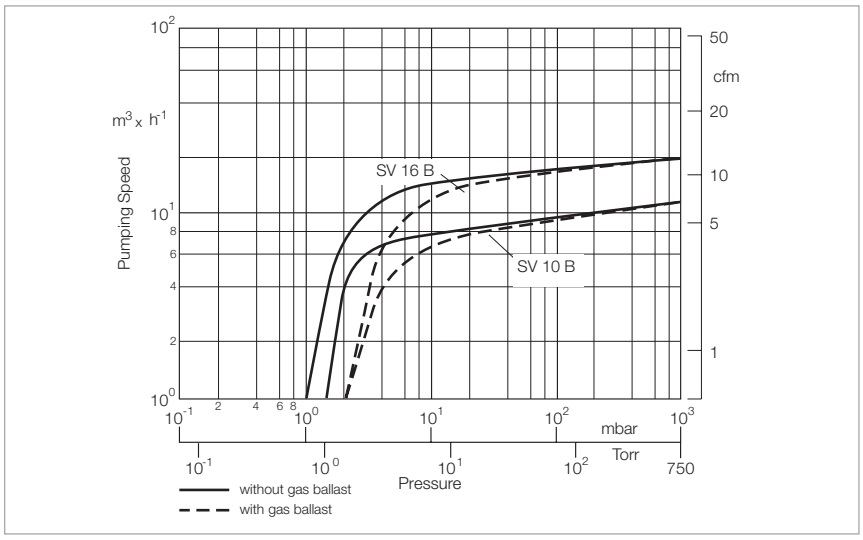

Pumping speed characteristics for the SOGEVAC SV 10 B and SV 16 B at 60 Hz

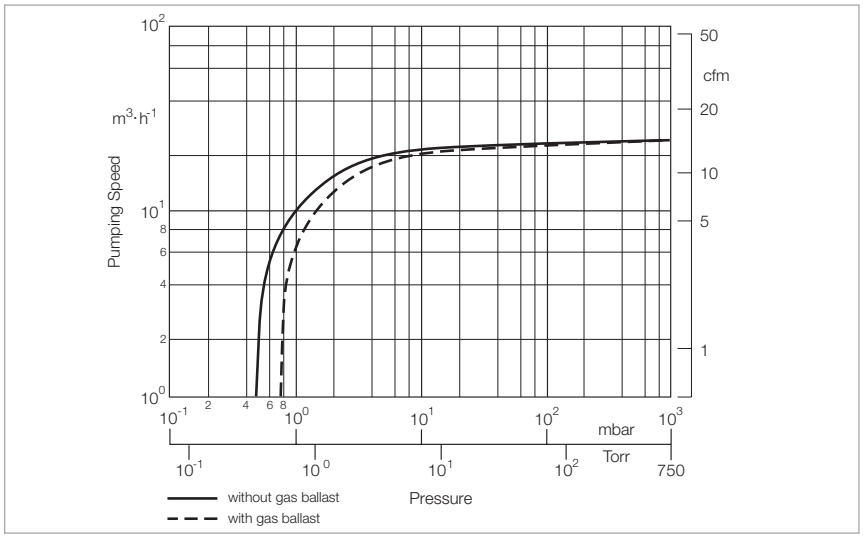

Pumping speed characteristics for the SOGEVAC SV 25 B at 60 Hz

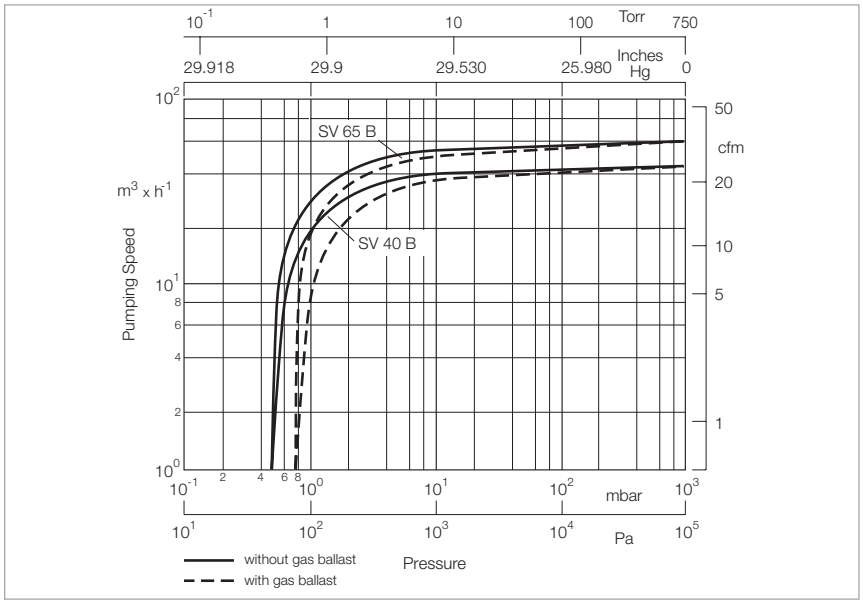

Pumping speed characteristics for the SOGEVAC SV 40 B and SV 65 B at 60 Hz

Only available for purchase in North and South America

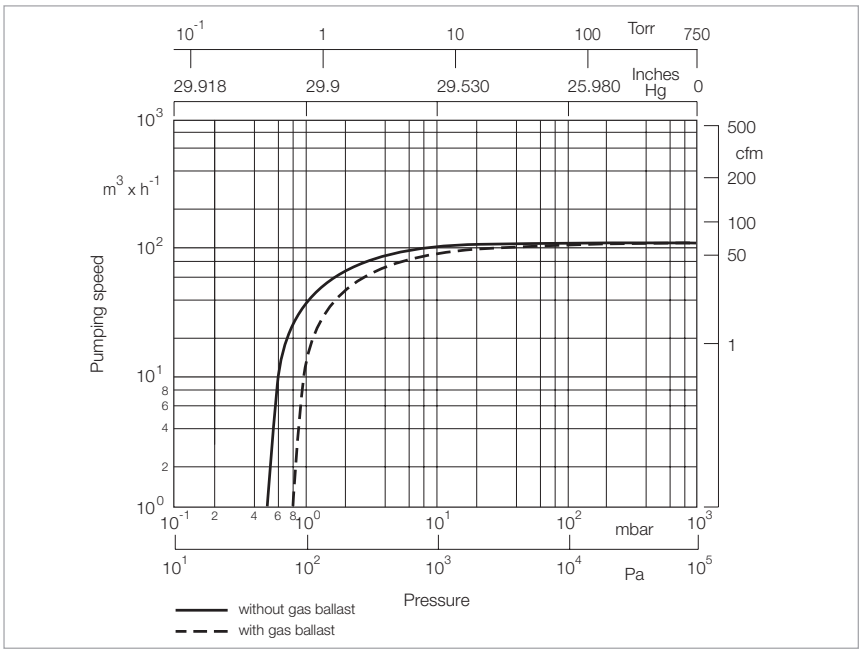

Pumping speed characteristics for the SOGEVAC SV 100 B at 60 Hz

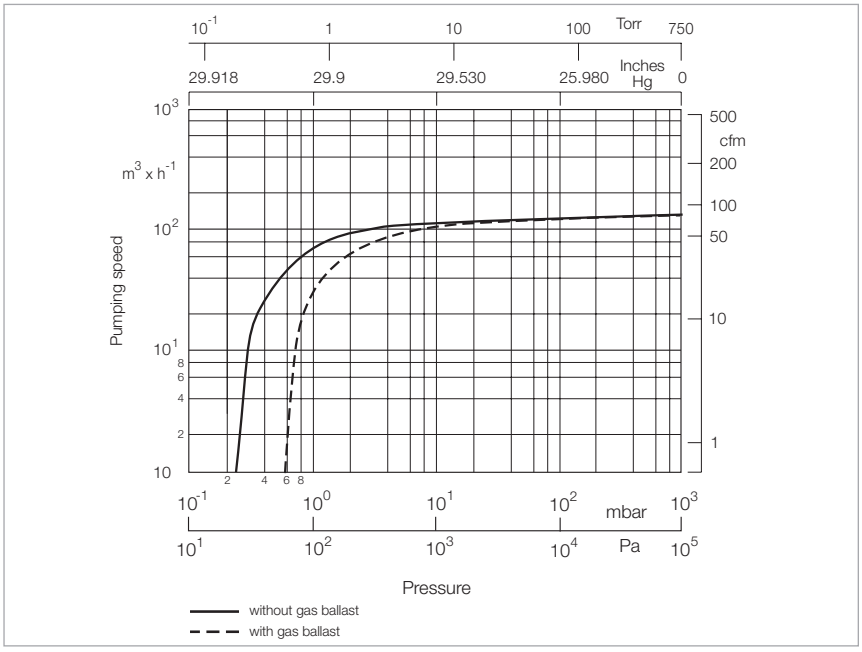

Pumping speed characteristics for the SOGEVAC SV 120 B at 60 Hz

Only available for purchase in North and South America

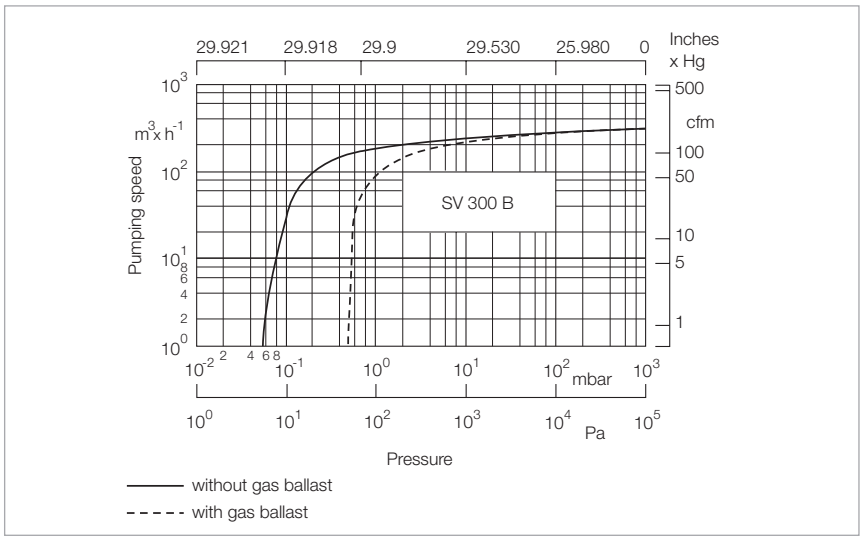

Pumping speed characteristics for the SOGEVAC SV 300 B at 60 Hz

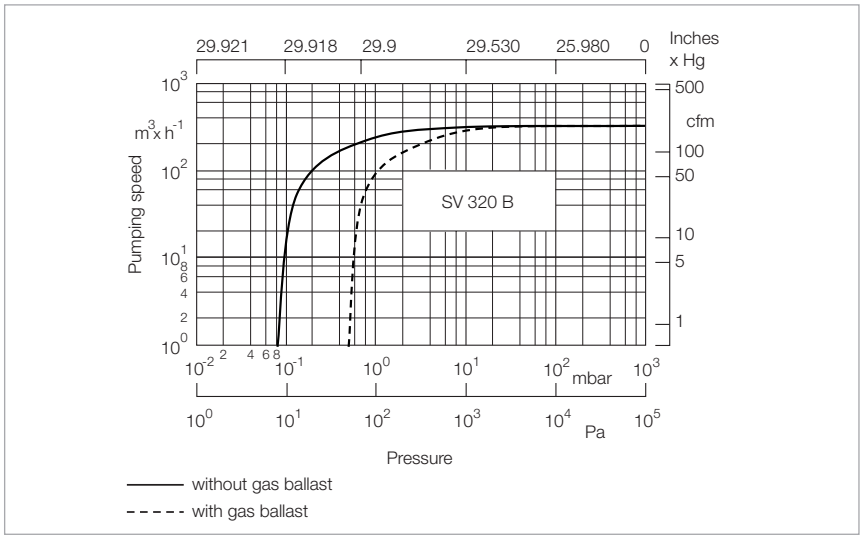

Pumping speed characteristics for the SOGEVAC SV 320 B at 60 Hz

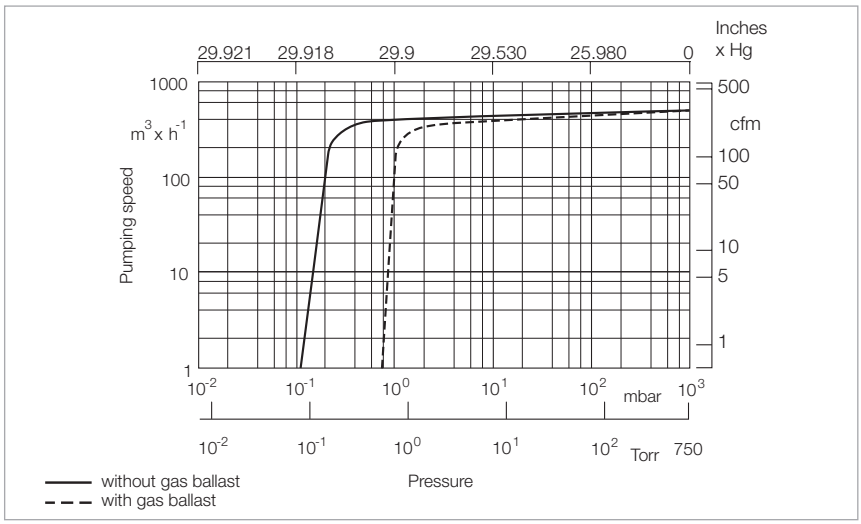

Pumping speed characteristics of the SOGEVAC SV 470 B(F) and 570 B(F) at 60 Hz operation

Only available for purchase in North and South America

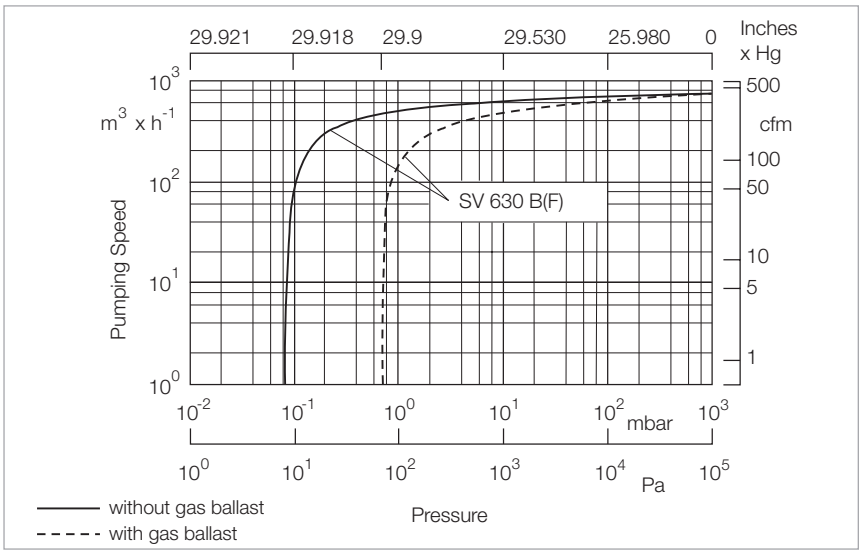

Pumping speed characteristics for the SOGEVAC SV 630 B(F) at 60 Hz

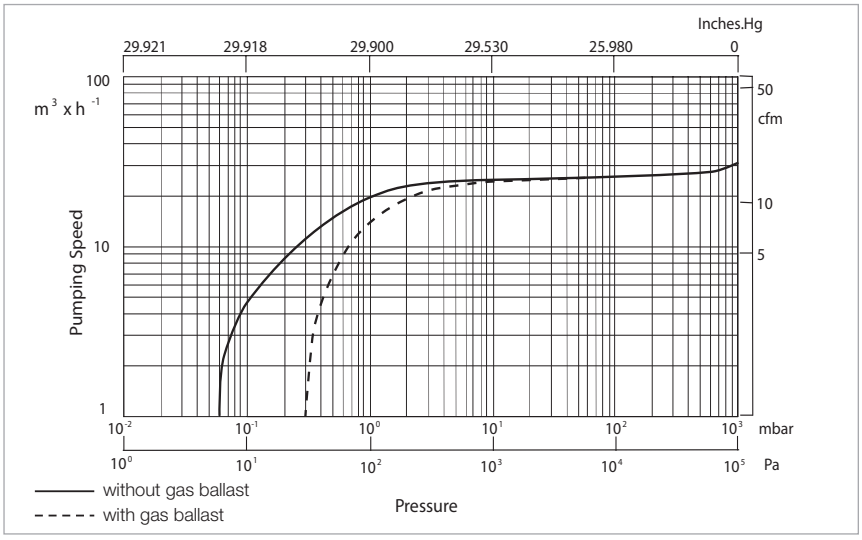

Pumping speed characteristics for the SOGEVAC SV 28 BI at 60 Hz

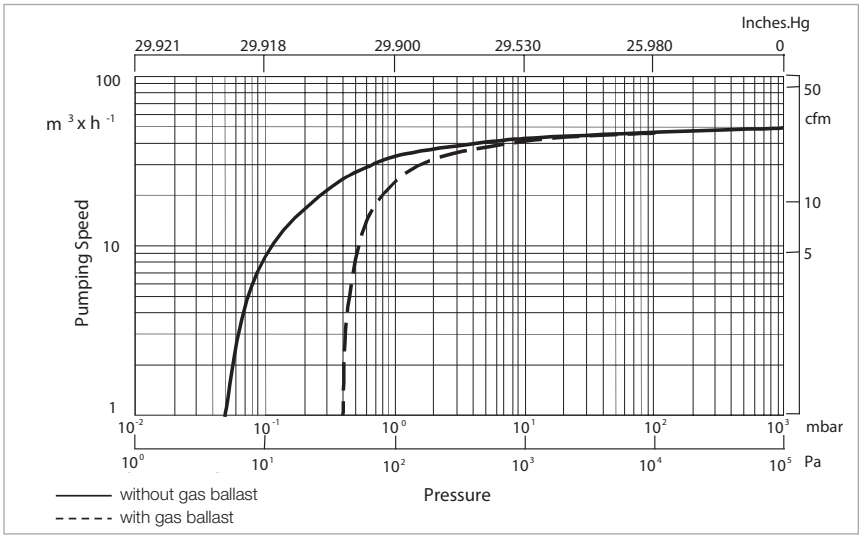

Pumping speed characteristics for the SOGEVAC SV 40 BI at 60 Hz

Only available for purchase in North and South America

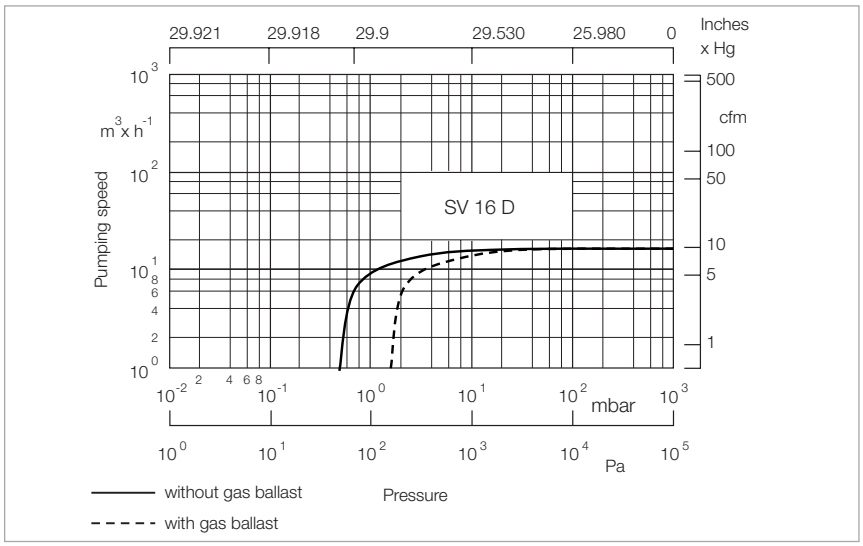

Pumping speed characteristics of the SOGEVAC SV 16 D at 60 Hz

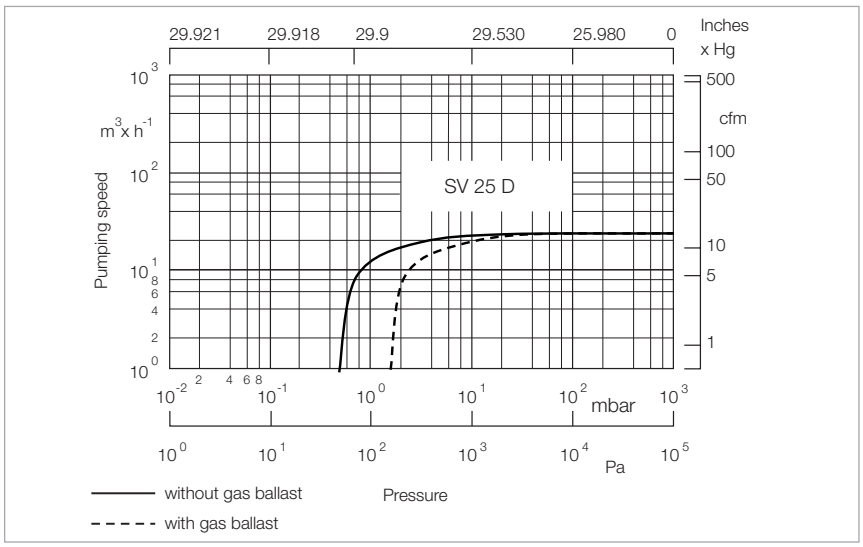

Pumping speed characteristics of the SOGEVAC SV 25 D at 60 Hz

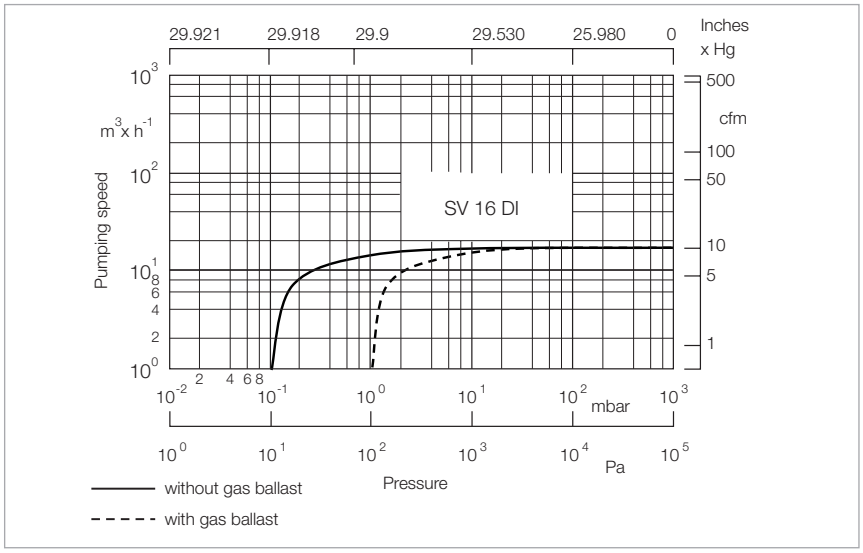

Pumping speed characteristics of the SOGEVAC SV 16 DI at 60 Hz

Only available for purchase in North and South America

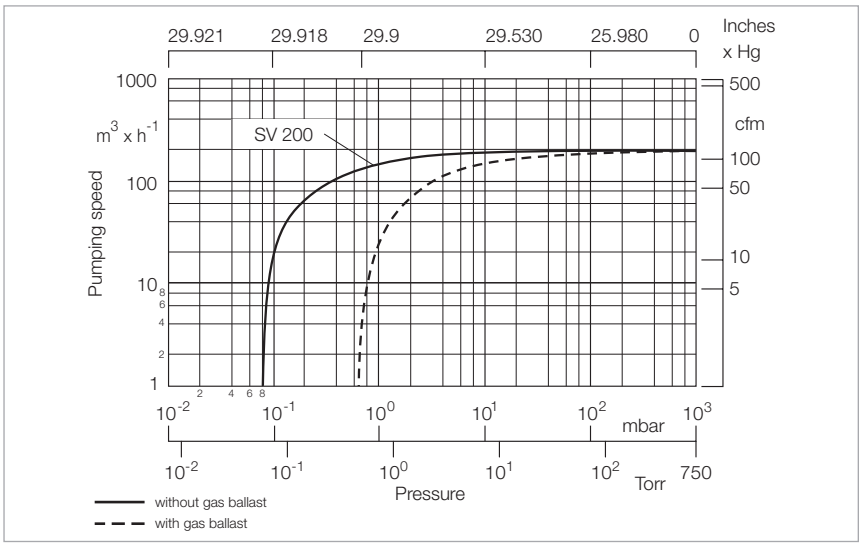

Pumping speed characteristics for the SOGEVAC SV 200 at 60 Hz

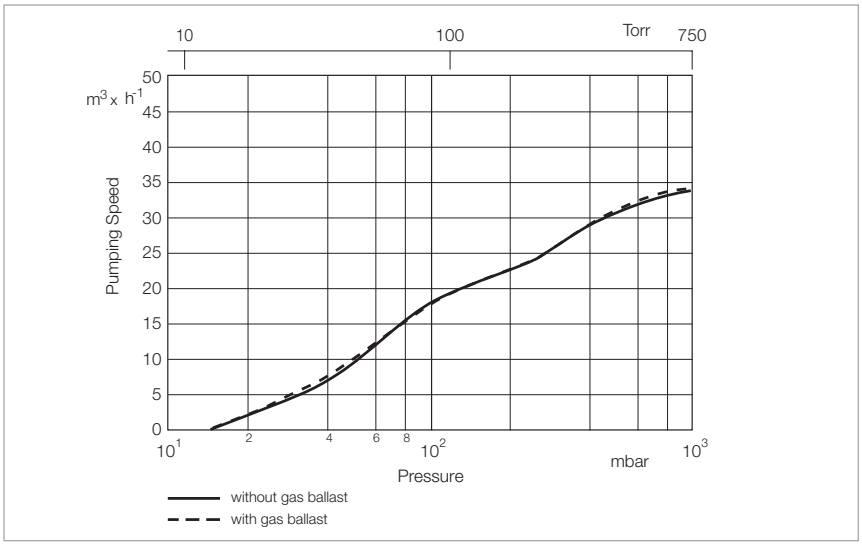

Pumping speed characteristics of the SOGEVAC SV 40 ATEX at 60 Hz for gases of the material group IIB and H_2

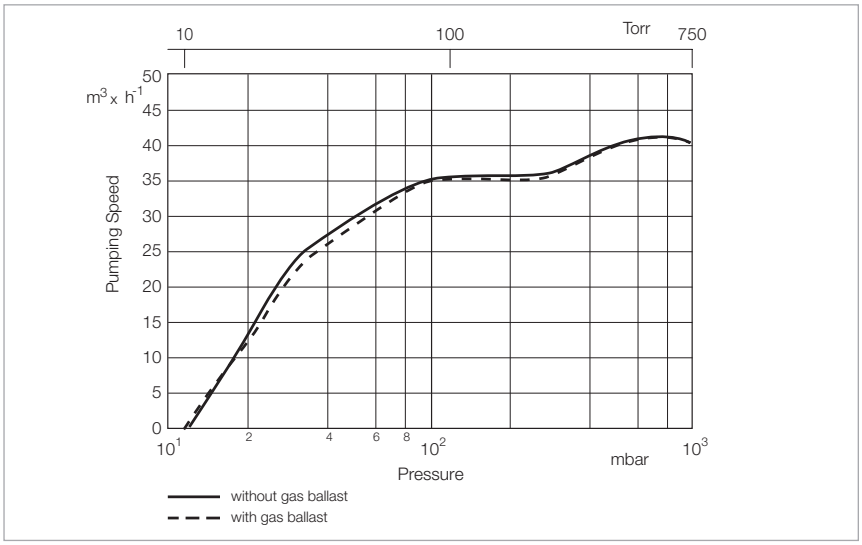

Pumping speed characteristics of the SOGEVAC SV 40 ATEX at 60 Hz for gases of the material group IIA

Only available for purchase in North and South America

Combination Filter
Vacuum Pump Inlet Filter

Combination filter

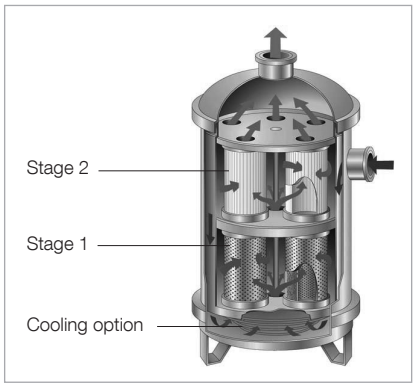

Combination filter: cutaway view

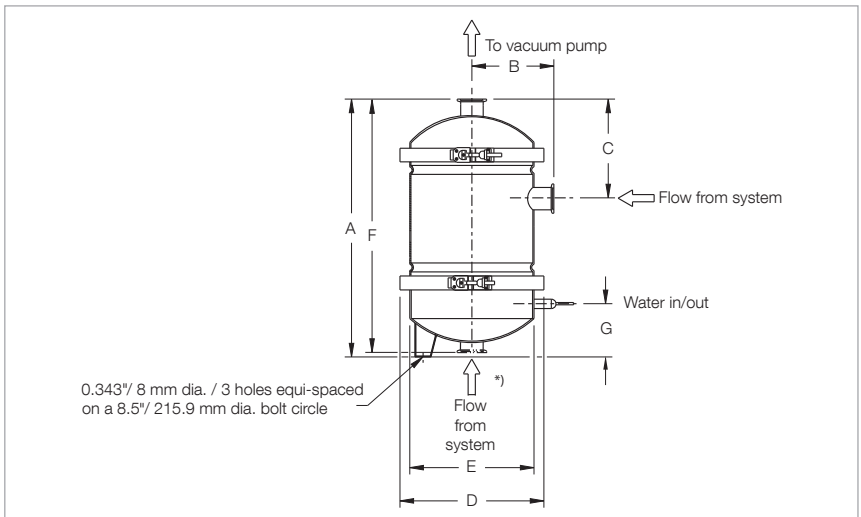

Model		A	B	C	D	E	F *)	G
DN 40 and 63 ISO-KF	mm	457	152	152	268	254	451	–
in.	18.0	6.0	6.0	10.56	10.0	17.75	–	
Combination Filter with Cooling Option base installed	mm	544	152	152	268	254	–	119
in.	21.4	6.0	6.0	10.56	10.0	–	4.7	

*) Straight-thru configuration

Dimensional drawing for the combination filter

The combination filter is a high efficiency vacuum pump inlet filter designed specifically to condense, absorb, and neutralize process byproducts generated from vacuum applications in the chemical and pharmaceutical industries.

Advantages to the User

- All stainless steel construction withstands corrosive environments
- Modular design allows for numerous configurations and easy servicing
- Stacking modules available for increased capacity
- Optional drain port for solvent draining and reclamation
- Customizable absorption/neutralization stages for optimal efficiency
- Processes such as distillation, drying, degassing, central lab vacuum protection
- Cooling option: Large cooled surface area for condensing of solvents, acids and water vapor

Specifications

- Construction in stainless steel 304
- Upper and lower seals in Buna N and Viton

Cooling Option for combination filter

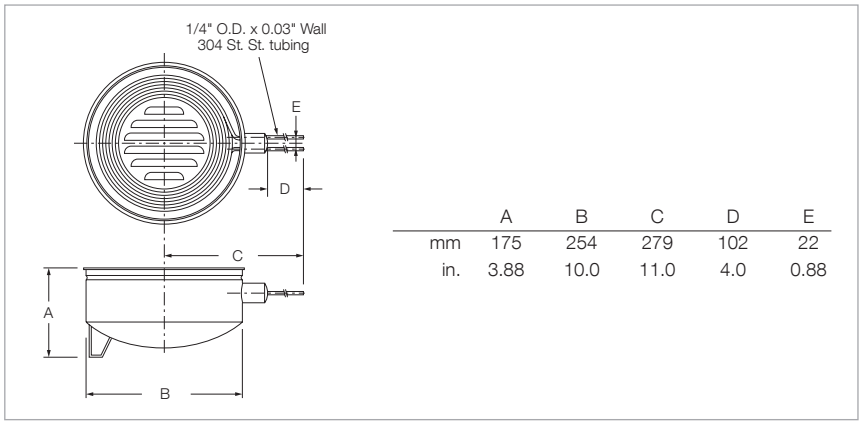

	A	B	C	D	E
mm	175	254	279	102	22
in.	3.88	10.0	11.0	4.0	0.88

Dimensional drawing for the combination filter Cooling Option

Ordering Information

Combination Filter

	DN 40 ISO-KF	DN 63 ISO-K
	Part No.	Part No.
Combination filter 5 filter elements in stage 1 and 5 elements in stage 2 (elements not included)	180497V	180499V
straight-thru configuration, same as above except inlet on bottom	180498V	–
Stacking modules includes 2 stages (5 elements ea.), 11.25“ (286 mm) tall, all attachment hardware included (filter elements not included)	180500V	180500V
Cooling Option base, 0.5 – 1.0 GPM (2 – 4 LPM) water flow recommended	180501V	180501V

Ordering Information

Filter Elements

	Part No.
Copper gauze	180502V
Stainless steel gauze	180503V
Molecular sieve	180504V
Porous mixture of sodium hydroxide and potassium hydroxide	180505V
Activated charcoal	180506V
Pleated polypropylene 2 micron (99% efficient)	180507V
Pleated polypropylene 5 micron (99% efficient)	180508V
Pleated polypropylene 20 micron (99% efficient)	180509V

Ordering Information

Adapters (Stainless Steel)

	Part No.
DN 40 ISO-KF to 1 1/4" NPT (male)	899 627
DN 40 ISO-KF to 2" NPT (male)	899 629
DN 63 ISO-K to 2" NPT (male)	721 03 040

Oil Sealed Screw Vacuum Pumps VACUBE VQ 400 i to VQ 1650 iCH

Screw vacuum pump VACUBE VQ 1250 iCH

VACUBE is a new generation of intelligent, single-stage, oil sealed screw vacuum pumps with Variable Speed Drive (VSD) technology.

VACUBE generates vacuum on demand. All pumps are controlled and maintained by an internal controller. The systems offer superior performance for a wide range of rough vacuum applications.

Models

i – model

Ideal for standard vapor free applications as needed in central vacuum systems for holding, lifting and moving of parts and components.

iH – model

This variant is best suited for applications with high water vapor ingress. The high water vapor tolerance level makes the iH – model best suited for the humid applications.

iC – model

The iC – VACUBE variant is specifically designed to support the special needs in short cycling applications, as for example common in vacuum packaging or assembly lines for electronic equipment.

iCH – model

The combination of „iH“ and „iC“ offers high water vapor tolerance and the short cycling ability.

Advantage to the User

- **Pump efficiency**
  - Variable speed drive (VSD)
  - Internal controller
- **Power demand**
  - Sustainable power saving due to on-demand vacuum generation
- **Work space environment**
  - Ultra-high oil retention system
  - Quiet operation, noise level bench mark
  - Small footprint – pallet size dimensions* (*up to 950 m³/h speed)
  - “Plug and play” system set up
- **Sustainable productivity**
  - Programable operation modes
  - Long maintenance intervals

Typical Applications

- **Holding, lifting and moving**
  - Print & Paper
  - Packaging
  - Electronic manufacturing
- **Woodworking**
  - Li-Ion cell manufacturing
  - Glass manufacturing
- **Forming and shaping**
  - Plastics (e.g. bath tubs, shower trays, white goods internals)
  - Packaging materials (e.g. thermoformed parts)
  - Glass items such as bottles and windscreens
  - Wood lamination
- **Preserving**
  - Meat packaging (skin, modified atmosphere packaging MAP)
  - Poultry packaging
  - Canning
  - Food freeze drying
- **Dehumidification**
  - Vacuum cooling
  - Roof tile and brick manufacture
  - Pipeline drying
- **Special demands**
  - Altitude testing
  - Special evacuation duties
  - Coating
  - Clean environments

Integrated Controller / Monitoring System

The VACUBE controller maintains the pressure within programmable limits by automatically adapting the motor speed. A number of programmable settings, e.g. the setpoint, the minimum stop time and the maximum number of motor starts and several other parameters are hereby taken into account.

The controller stops the vacuum pump whenever possible to reduce the power consumption and restarts it automatically when the pressure increases.

For H version pumps, the pump is equipped with a purge cycle which prevents and removes condensed water in the sealing oil.

The controller can be operated intuitively. A comfortable 3,5” – Color Display is used as graphic user interface to call up menus or to input customized settings easily. LED’s inform about maintenance and service demands.

Multiple controllers can be linked with each other.

Further features:

- Set point pressure selection
- Gas ballast on/off
- Displays:
  - Pressures (inlet, discharge)
  - Temperatures
  - Alarms and warnings
  - Counters (e.g. running hours, pump starts, etc.)
- Week timer function
- Language and unit selection

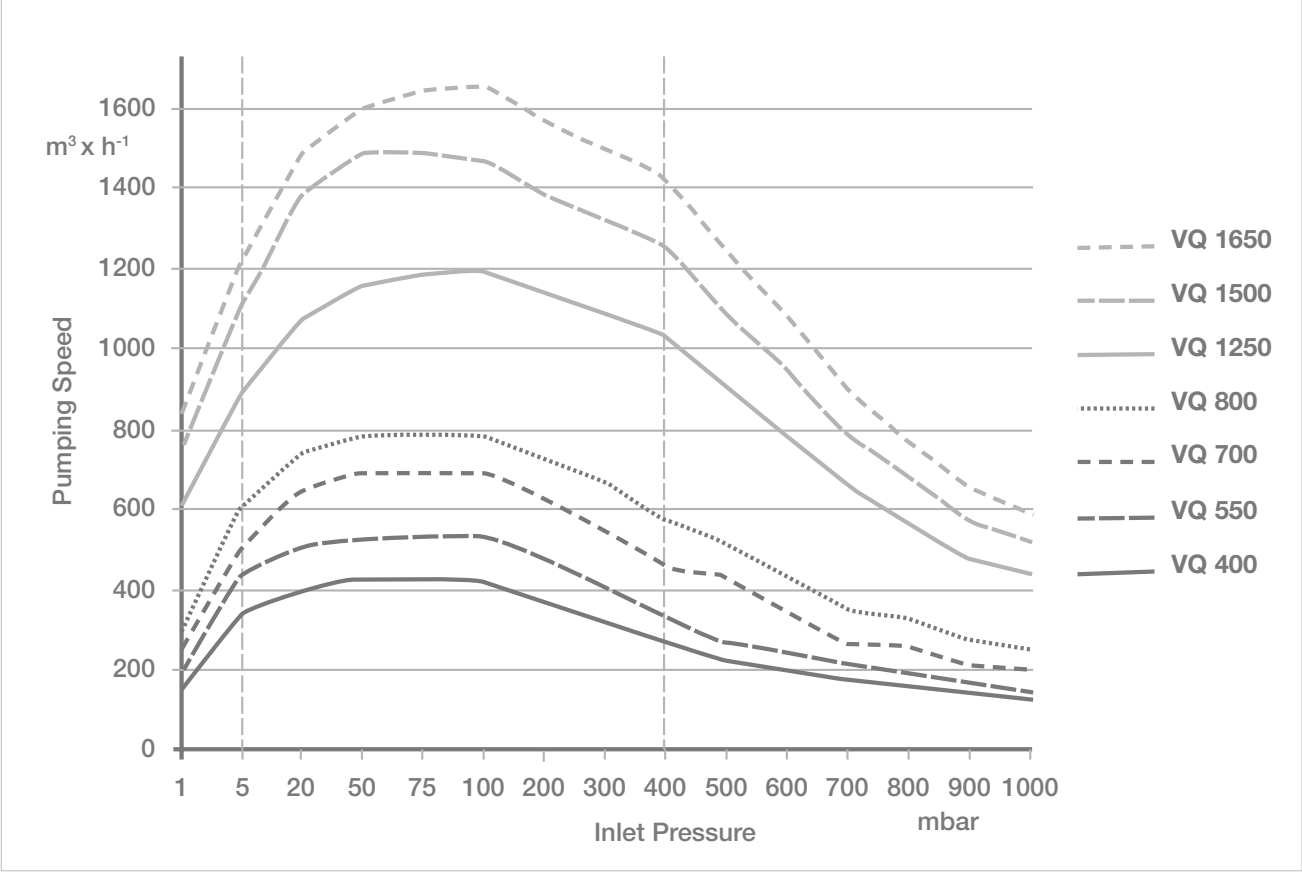

Pumping speed characteristics

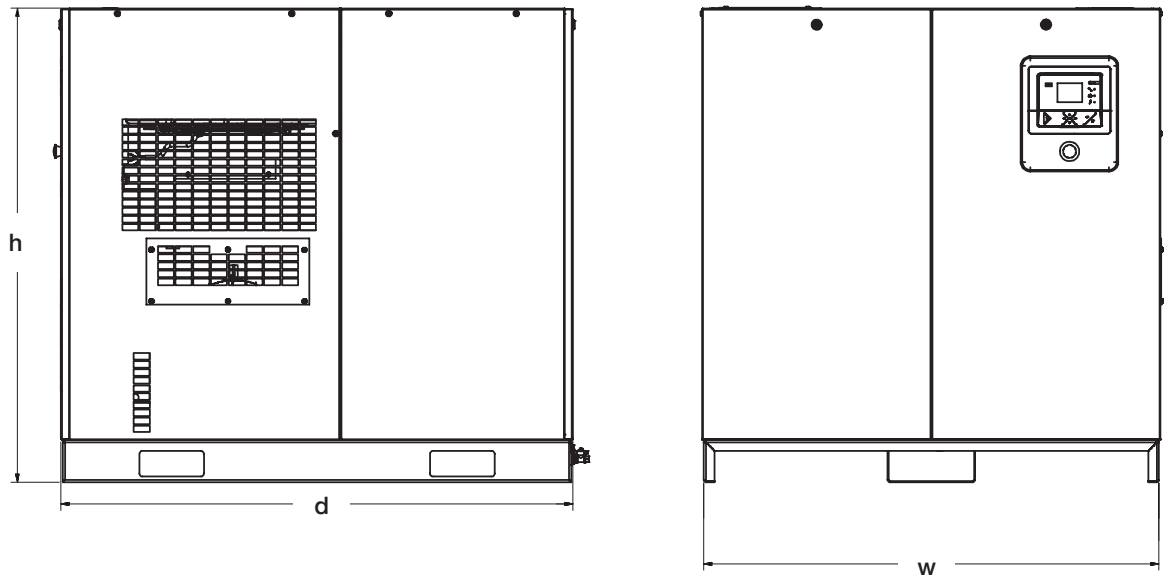

		w	h	d
VACUBE 400 - 800	mm (inch)	1266 (49.84)	1083 (42.64)	934 (36.77)
VACUBE 1250 - 1650	mm (inch)	1420 (55.91)	1470 (57.87)	1590 (62.60)

Dimensional drawing VACUBE

Technical Data

		VACUBE						
		VQ 400	VQ 550	VQ 700	VQ 800	VQ 1250	VQ 1500	VQ 1650
Max. eff. pumping speed	m^3/h / cfm	420 / 247	530 / 310	700 / 412	790 /465	1250 / 736	1490 / 877	1620 / 955
Ultimate pressure	mbar / Torr	0.35 / 0.26						
Motorshaft power	kW / hp	5.5 / 7.5	7.5 / 10	11 / 15	15 / 20	22 / 29	30 / 40	37 / 50
Noise level	dB(A)	51 – 65	51 – 65	51 – 73	51 – 76	65 – 75	65 – 75	65 – 80
Ambient temperature	°C / °F	0 – 46 / 32 – 115						
Weight	kg / lbs	500 / 1102	500 / 1102	510 / 1125	520 / 1147	1058/ 2333	1058/ 2333	1073/ 2366
Motor protection class	IP	54						
Supply voltages*		380 – 460V, 3ph, 50/60Hz						

* other voltages available on request

Ordering Information

VACUBE

	Part No.
VACUBE VQ 400 i	**177040V01**
VACUBE VQ 400 iH	**177040V10**
VACUBE VQ 550 i	**177055V01**
VACUBE VQ 550 iC	**177055V05**
VACUBE VQ 550 iH	**177055V10**
VACUBE VQ 550 iCH	**177055V15**
VACUBE VQ 700 i	**177070V01**
VACUBE VQ 700 iC	**177070V05**
VACUBE VQ 700 iH	**177070V10**
VACUBE VQ 700 iCH	**177070V15**
VACUBE VQ 800 i	**177080V01**
VACUBE VQ 800 iC	**177080V05**
VACUBE VQ 800 iH	**177080V10**
VACUBE VQ 800 iCH	**177080V15**
VACUBE VQ 1250 i	**177125V01**
VACUBE VQ 1250 iH	**177125V10**
VACUBE VQ 1500 i	**177150V01**
VACUBE VQ 1500 iC	**177150V05**
VACUBE VQ 1500 iH	**177150V10**
VACUBE VQ 1500 iCH	**177150V15**
VACUBE VQ 1650 i	**177165V01**
VACUBE VQ 1650 iC	**177165V05**
VACUBE VQ 1650 iH	**177165V10**
VACUBE VQ 1650 iCH	**177165V15**

Sales and Service

Germany

Leybold GmbH
Bonner Strasse 498
D-50968 Cologne
T: +49-(0)221-347 1234
F: +49-(0)221-347 31234
sales@leybold.com
www.leybold.com

Leybold GmbH
Sales Area North
Branch Office Berlin
Industriestrasse 10b
D-12099 Berlin
T: +49-(0)30-435 609 0
F: +49-(0)30-435 609 10
sales.bn@leybold.com

Leybold GmbH
Sales Office South
Branch Office Munich
Karl-Hammerschmidt-Strasse 34
D-85609 Aschheim-Dornach
T: +49-(0)89-357 33 9-10
F: +49-(0)89-357 33 9-33
sales.mn@leybold.com
service.mn@leybold.com

Leybold Dresden GmbH
Service Competence Center
Zur Wetterwarte 50, Haus 304
D-01109 Dresden
Service:
T: +49-(0)351-88 55 00
F: +49-(0)351-88 55 041
info.dr@leybold.com

Europe

Belgium

Leybold Nederland B.V.
Belgisch bijkantoor
Leuvensesteenweg 542
B-1930 Zaventem
Sales:
T: +32-2-711 00 83
F: +32-2-720 83 38
sales.zv@leybold.com
Service:
T: +32-2-711 00 82
F: +32-2-720 83 38
service.zv@leybold.com

France

Leybold France S.A.S.
Parc du Technopolis, Bâtiment Beta
3, Avenue du Canada
F-91940 Les Ulis cedex
Sales and Service:
T: +33-1-69 82 48 00
F: +33-1-69 07 57 38
sales.or@leybold.com
orsay.sav@leybold.com

Leybold France S.A.S.
Valence Factory
640, Rue A. Bergès
B.P. 107
F-26501 Bourg-lès-Valence Cedex
T: +33-4-75 82 33 00
F: +33-4-75 82 92 69
marketing.vc@leybold.com

Great Britain

Leybold UK LTD.
Unit 9
Silverglade Business Park
Leatherhead Road
Chessington
Surrey (London)
KT9 2QL
Sales:
T: +44-13-7273 7300
F: +44-13-7273 7301
sales.ln@leybold.com
Service:
T: +44-13-7273 7320
F: +44-13-7273 7303
service.ln@leybold.com

Italy

Leybold Italia S.r.l.
Via Filippo Brunelleschi 2
I-20093 Cologno Monzese
Sales:
T: +39-02-27 22 31
F: +39-02-27 20 96 41
sales.mi@leybold.com
Service:
T: +39-02-27 22 31
F: +39-02-27 22 32 17
service.mi@leybold.com

Netherlands

Leybold Nederland B.V.
Floridadreef 102
NL-3565 AM Utrecht
Sales and Service:
T: +31-(30) 242 63 30
F: +31-(30) 242 63 31
sales.ut@leybold.com
service.ut@leybold.com

Russia

Leybold Russia
Vashutinskoe Road 15,
Khimki, Moscow region,
141402
Russia
T: +7 495 933 55 50
LeyboldRussia@leybold.com

Switzerland

Leybold Schweiz AG
Hinterbergstrasse 56
CH-6312 Steinhausen
Warehouse and shipping address:
Riedthofstrasse 214
CH-8105 Regensdorf
Sales:
T: +41-44-308 40 50
F: +41-44-308 40 60
sales.zh@leybold.com
Service:
T: +41-44-308 40 62
F: +41-44-308 40 60
service.zh@leybold.com

Spain

Leybold Hispánica, S.A.
C/. Huelva, 7
E-08940 Cornellá de Llobregat
(Barcelona)
Sales:
T: +34-93-666 43 11
F: +34-93-666 43 70
sales.ba@leybold.com
Service:
T: +34-93-666 46 11
F: +34-93-685 43 70
service.ba@leybold.com

America

USA

Leybold USA Inc.
6005 Enterprise Drive
Export, PA 15632
USA
Sales and Service:
T: +1-800-764-5369
F: +1-800-325-4353
F: +1-800-215-7782
sales.ex@leybold.com
service.ex@leybold.com

Brazil

Leybold do Brasil Ltda.
Av. Tamboré, 937, Tamboré
Distrito Industrial
CEP 06460-000 Barueri - SP
Sales und Service:
T: +55 11 3376 4604
info.ju@leybold.com

Asia

P. R. China

Leybold (Tianjin)
International Trade Co. Ltd.
Beichen Economic
Development Area (BEDA),
No. 8 Western Shuangchen Road
Tianjin 300400
China
Sales and Service:
T: +86-400 038 8989
T: +86-800 818 0033
F: +86-22-2697 4061
F: +86-22-2697 2017
sales.tj@leybold.com
service.tj@leybold.com

India

Leybold India Pvt Ltd.
T-97/2, MIDC Bhosari
Pune-411 026
Indien
Sales and Service:
T: +91-80-2783 9925
F: +91-80-2783 9926
sales.bgl@leybold.com
service.bgl@leybold.com

Japan

Leybold Japan Co., Ltd.
Shin-Yokohama A.K.Bldg., 4th floor
3-23-3, Shin-Yokohama
Kohoku-ku, Yokohama-shi
Kanagawa-ken 222-0033
Japan
Sales:
T: +81-45-471-3330
F: +81-45-471-3323
sales.yh@leybold.com

Malaysia

Leybold Malaysia
Leybold Singapore Pte Ltd.
No. 1 Jalan Hi-Tech 2/6
Kulim Hi-Tech Park
Kulim, Kedah Darul
Aman 09090
Malaysia
Sales and Service:
T: +604 4020 222
F: +604 4020 221
sales.ku@leybold.com
service.ku@leybold.com

South Korea

Leybold Korea Ltd.
25, Hwangsaeul-ro 258 beon-gil,
undang-gu, Seongnam-si,
Gyeonggi-do,
(7F Sunae Finance Tower)
13595 Bundang
Sales:
T: +82-31 785 1367
F: +82-31 785 1359
sales.bd@leybold.com
Service:
T: +82-41 589 3035
F: +82-41 588 0166
service.cn@leybold.com

Singapore

Leybold Singapore Pte Ltd.
42 Loyang Drive
Loyang Industrial Estate
Singapore 508962
Singapore
Sales and Service:
T: +65-6303 7030
F: +65-6773 0039
info.sg@leybold.com

Taiwan

Leybold Taiwan Ltd.
10F., No. 32, Chenggong 12th St.,
Zhubei City, Hsinchu County 302
Taiwan, R.O.C.
Sales and Service:
T: +886-3-500 1688
F: +886-3-550 6523
info.hc@leybold.com

Leybold GmbH
Bonner Strasse 498
D-50968 Cologne
T: +49-(0)221-347-0
F: +49-(0)221-347-1250
info@leybold.com

Leybold

www.leybold.com